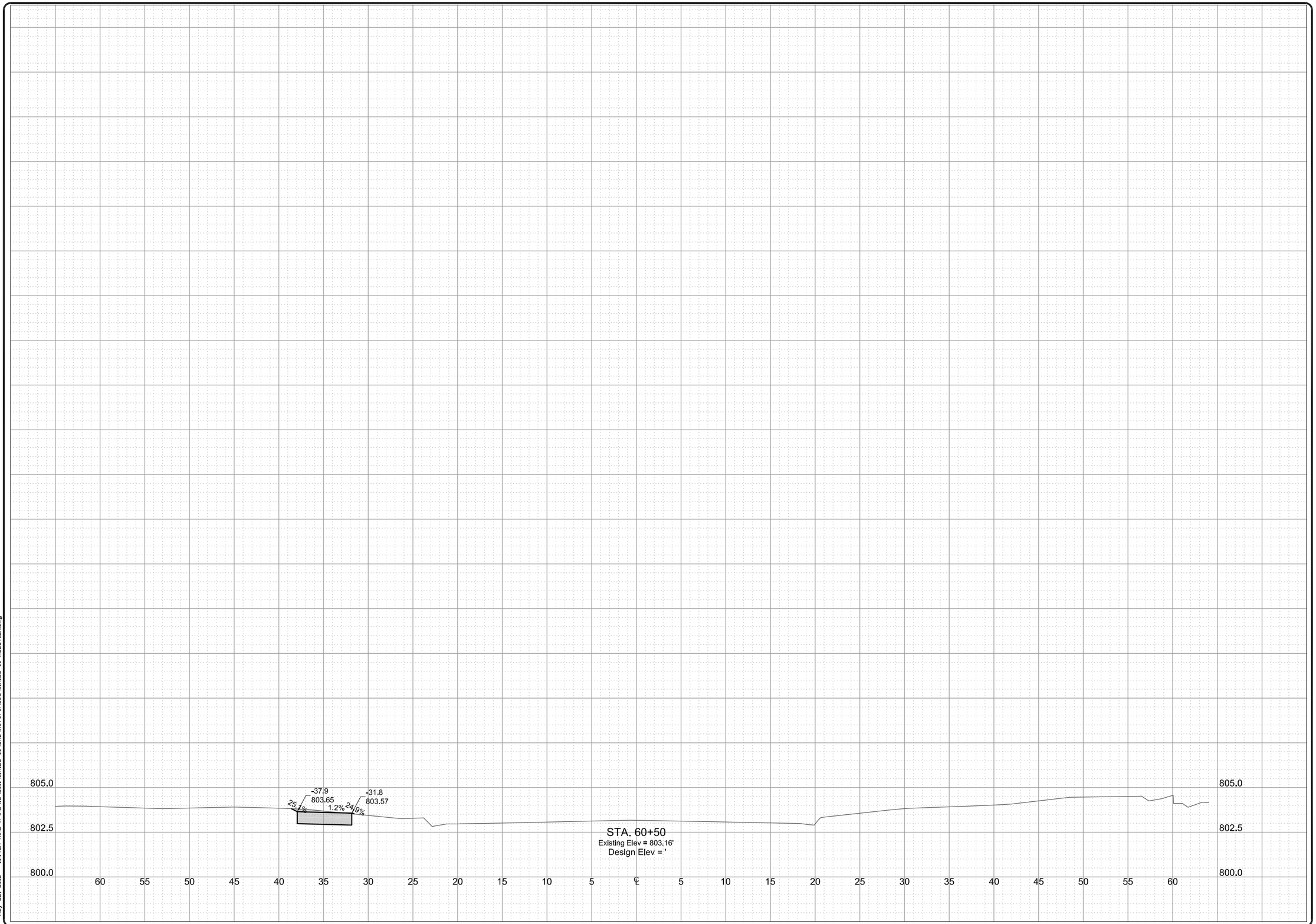

May 22, 2012 - 10:14am mlh2 X:\ML\IE\2011\11M126-00\CAD\References\11M126-00-XSECTION.dwg

Foth

Foth Infrastructure & Environment, LLC
2514 S. 102nd Street
Suite 278, Lincoln Center II
West Allis, WI 53227
Phone: 414-336-7900 Fax: 414-336-7901

REUSE OF DOCUMENTS
THIS DOCUMENT HAS BEEN DEVELOPED FOR A SPECIFIC APPLICATION AND NOT FOR GENERAL USE. THEREFORE IT MAY NOT BE USED WITHOUT THE WRITTEN APPROVAL OF FOTH INFRASTRUCTURE AND ENVIRONMENT, LLC. UNAPPROVED USE IS THE SOLE RESPONSIBILITY OF THE UNAUTHORIZED USER.

TESS CORNERS DRIVE RECONSTRUCTION

CITY OF MUSKEGO

WAUKESHA COUNTY CITY OF MUSKEGO, WISCONSIN

REVISIONS

NO.	BY	DATE	DESCRIPTION
△			
△			
△			
△			

RECORD DRAWING OF COMPLETED CONSTRUCTION BY

RECORD DRAWINGS OF COMPLETED CONSTRUCTION CONFORMING TO CONTRACTOR AND/OR OWNERS RECORDS.
BY _____ DATE _____

Date of Preparation:

	BY	DATE
SURVEYED	JSH	10/31/2011
DRAWN	MLH	05/24/2012
DESIGNED	MPS	05/24/2012
CHECKED	MKS	05/24/2012

TESS CORNERS DRIVE CROSS SECTIONS

VERTICAL SCALE: 2.5 0

HORIZONTAL SCALE: 0 5 10

PROJECT ID 11M126.00

C3.42

SHEET 61 OF 79

© 2012 Foth Infrastructure & Environment, LLC

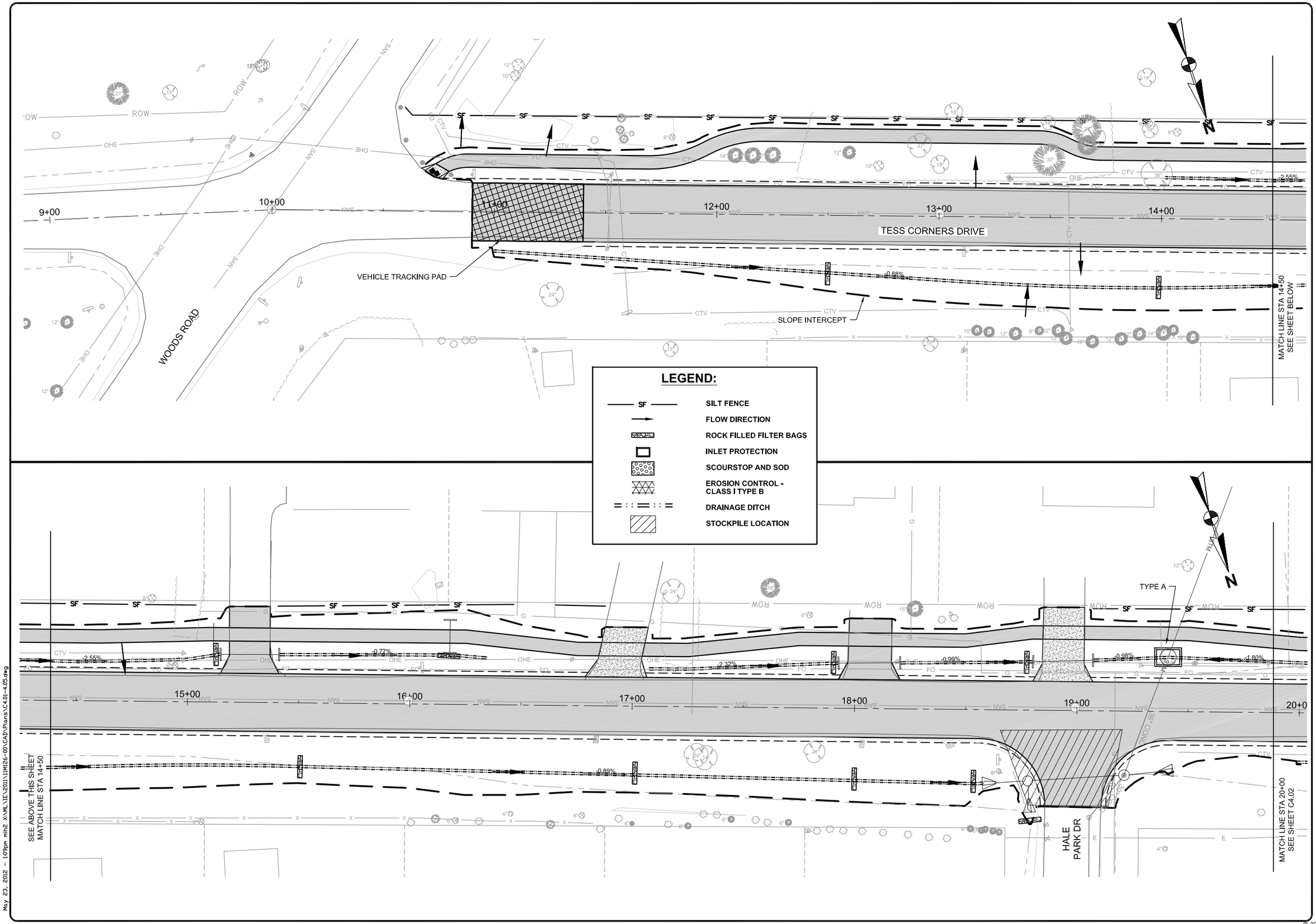

Foth Infrastructure & Environment, LLC
2514 S. 102nd Street
Suite 278, Lincoln Center II
West Allis, WI 53227
Phone: 414-336-7900 Fax: 414-336-7901

REUSE OF DOCUMENTS
THIS DOCUMENT HAS BEEN DEVELOPED FOR A SPECIFIC APPLICATION AND NOT FOR GENERAL USE. THEREFORE IT MAY NOT BE USED WITHOUT THE WRITTEN APPROVAL OF FOTH INFRASTRUCTURE AND ENVIRONMENT, LLC. UNAPPROVED USE IS THE SOLE RESPONSIBILITY OF THE UNAUTHORIZED USER.

TESS CORNERS DRIVE RECONSTRUCTION

CITY OF MUSKEGO

WAUKESHA COUNTY

CITY OF MUSKEGO, WISCONSIN

REVISIONS

NO.	BY	DATE	DESCRIPTION
△			
△			
△			
△			

RECORD DRAWING OF COMPLETED CONSTRUCTION BY

RECORD DRAWINGS OF COMPLETED CONSTRUCTION CONFORMING TO CONTRACTOR AND/OR OWNERS RECORDS.
BY _____ DATE _____

Date of Preparation:

	BY	DATE
SURVEYED	JSH	10/31/2011
DRAWN	MLH	05/24/2012
DESIGNED	MPS	05/24/2012
CHECKED	MKS	05/24/2012

TESS CORNERS DRIVE EROSION CONTROL

VERTICAL SCALE: 0 2

HORIZONTAL SCALE: 0 20 40

PROJECT ID 11M126.00

C4.01

SHEET 62 OF 79

© 2012 Foth Infrastructure & Environment, LLC

May 23, 2012 - 1:09pm mlh2 X:\ML\IE\2011\11M126-00\CAD\Plans\C4.01-4.05.dwg

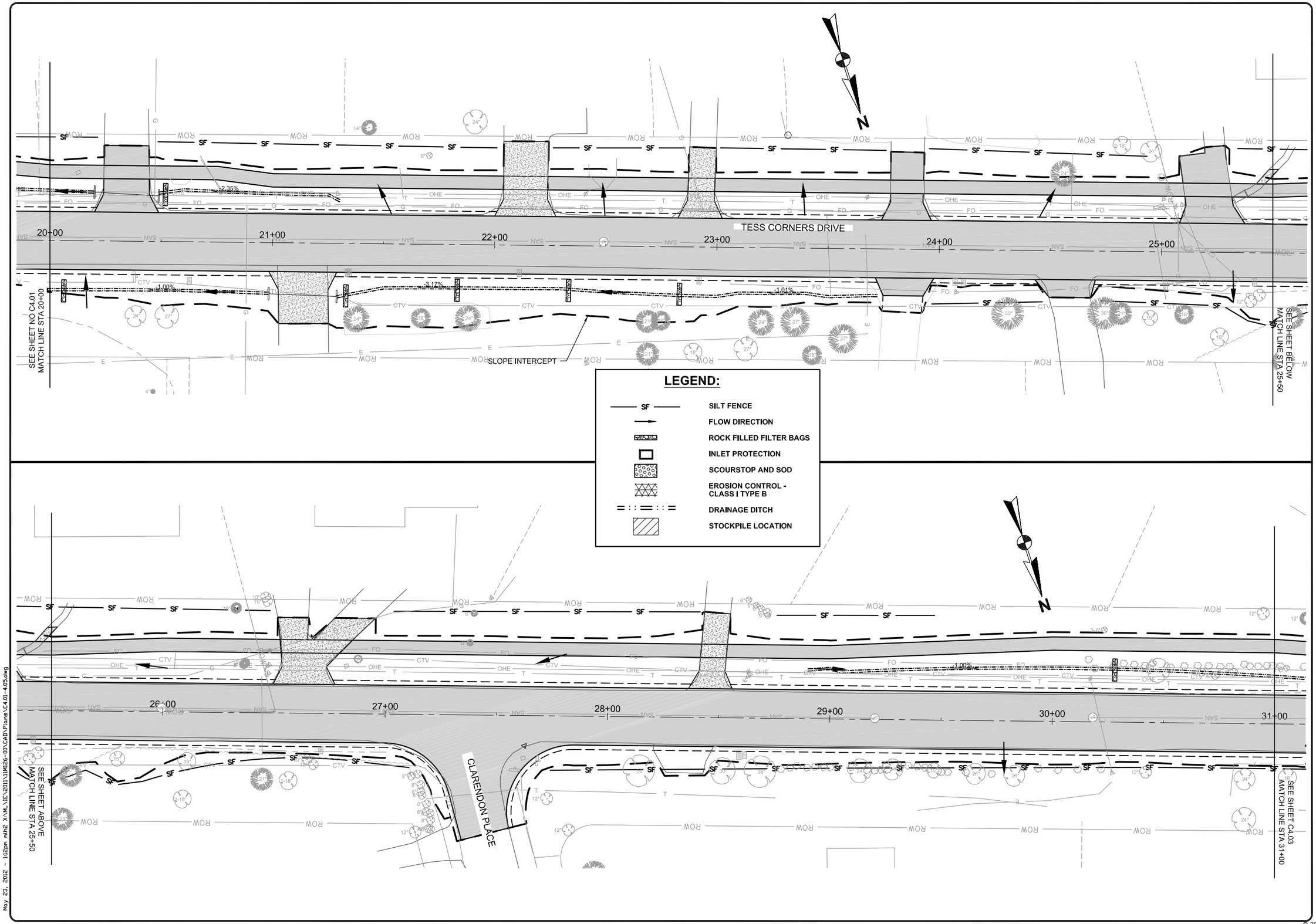

Foth Infrastructure & Environment, LLC
2514 S. 102nd Street
Suite 278, Lincoln Center II
West Allis, WI 53227
Phone: 414-336-7900 Fax: 414-336-7901

REUSE OF DOCUMENTS
THIS DOCUMENT HAS BEEN DEVELOPED FOR A SPECIFIC APPLICATION AND NOT FOR GENERAL USE. THEREFORE IT MAY NOT BE USED WITHOUT THE WRITTEN APPROVAL OF FOTH INFRASTRUCTURE AND ENVIRONMENT, LLC. UNAPPROVED USE IS THE SOLE RESPONSIBILITY OF THE UNAUTHORIZED USER.

TESS CORNERS DRIVE RECONSTRUCTION

CITY OF MUSKEGO

WAUKESHA COUNTY

CITY OF MUSKEGO, WISCONSIN

REVISIONS

NO.	BY	DATE	DESCRIPTION
△			
△			
△			
△			

RECORD DRAWING OF COMPLETED CONSTRUCTION BY

RECORD DRAWINGS OF COMPLETED CONSTRUCTION CONFORMING TO CONTRACTOR AND/OR OWNERS RECORDS.
BY _____ DATE _____

Date of Preparation:

	BY	DATE
SURVEYED	JSH	10/31/2011
DRAWN	MLH	05/24/2012
DESIGNED	MPS	05/24/2012
CHECKED	MKS	05/24/2012

TESS CORNERS DRIVE EROSION CONTROL

VERTICAL SCALE: 2 0

HORIZONTAL SCALE: 0 20 40

PROJECT ID 11M126.00

C4.02

SHEET 63 OF 79

© 2012 Foth Infrastructure & Environment, LLC

May 23, 2012 - 1:12pm mlh2 X:\ML\IE\2011\11M126-00\CAD\Plans\C4.01-4.05.dwg

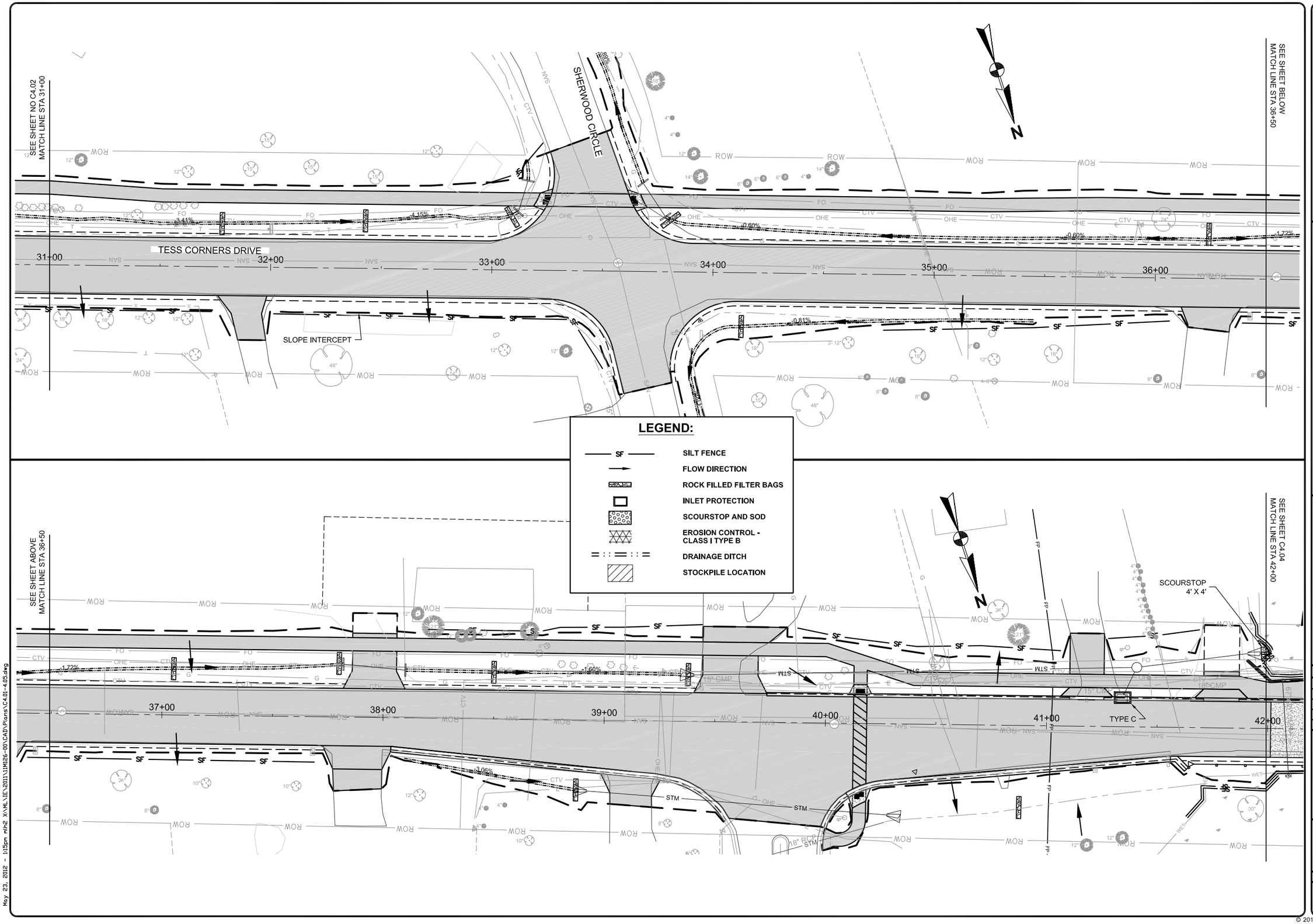

Foth
Foth Infrastructure & Environment, LLC
2544 S. 170th Street
Suite 278, Lincoln Center II
West Allis, WI 53227
Phone: 414-336-7900 Fax: 414-336-7901

REUSE OF DOCUMENTS
THIS DOCUMENT HAS BEEN DEVELOPED FOR A SPECIFIC APPLICATION AND NOT FOR GENERAL USE. THEREFORE IT MAY NOT BE USED, WITHOUT THE WRITTEN CONSENT OF FOTH INFRASTRUCTURE & ENVIRONMENT, LLC. UNAPPROVED USE IS THE SOLE RESPONSIBILITY OF THE UNAUTHORIZED USER.

TESS CORNERS DRIVE RECONSTRUCTION

CITY OF MUSKEGO

WAUKESHA COUNTY CITY OF MUSKEGO, WISCONSIN

REVISIONS			
NO.	BY	DATE	DESCRIPTION
△			
△			
△			
△			

RECORD DRAWING OF COMPLETED CONSTRUCTION BY

RECORD DRAWINGS OF COMPLETED CONSTRUCTION CONFORMING TO CONTRACTOR AND/OR OWNERS RECORDS.
BY _____ DATE _____

Date of Preparation:

	BY	DATE
SURVEYED	JSH	10/31/2011
DRAWN	MLH	05/24/2012
DESIGNED	MPS	05/24/2012
CHECKED	MKS	05/24/2012

TESS CORNERS DRIVE EROSION CONTROL

VERTICAL SCALE: 2 0

HORIZONTAL SCALE: 0 20 40

PROJECT ID 11M126.00

C4.03

SHEET 64 OF 79

© 2012 Foth Infrastructure & Environment, LLC

May 23, 2012 - 1:15pm mlh2 X:\ML\IE\2011\11M126-00\CAD\Plans\C4.01-4.05.dwg

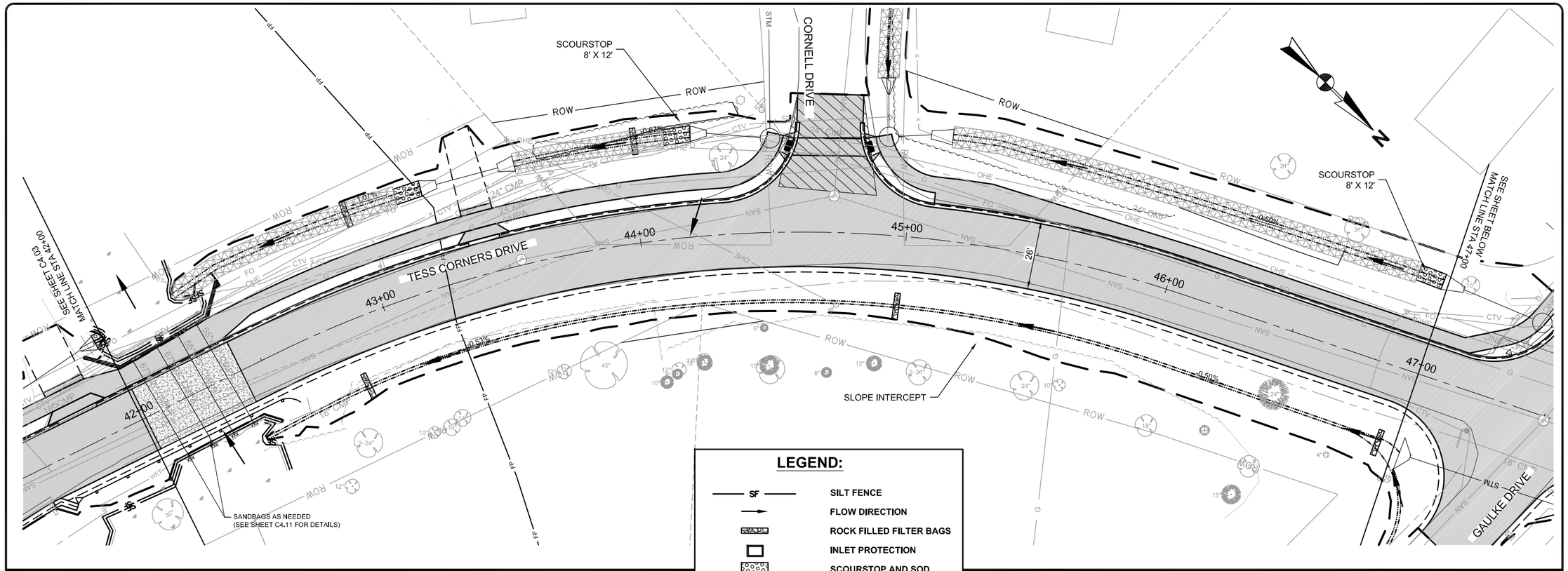

LEGEND:

SF	SILT FENCE
	FLOW DIRECTION
	ROCK FILLED FILTER BAGS
	INLET PROTECTION
	SCOURSTOP AND SOD
	EROSION CONTROL - CLASS I TYPE B
	DRAINAGE DITCH
	STOCKPILE LOCATION

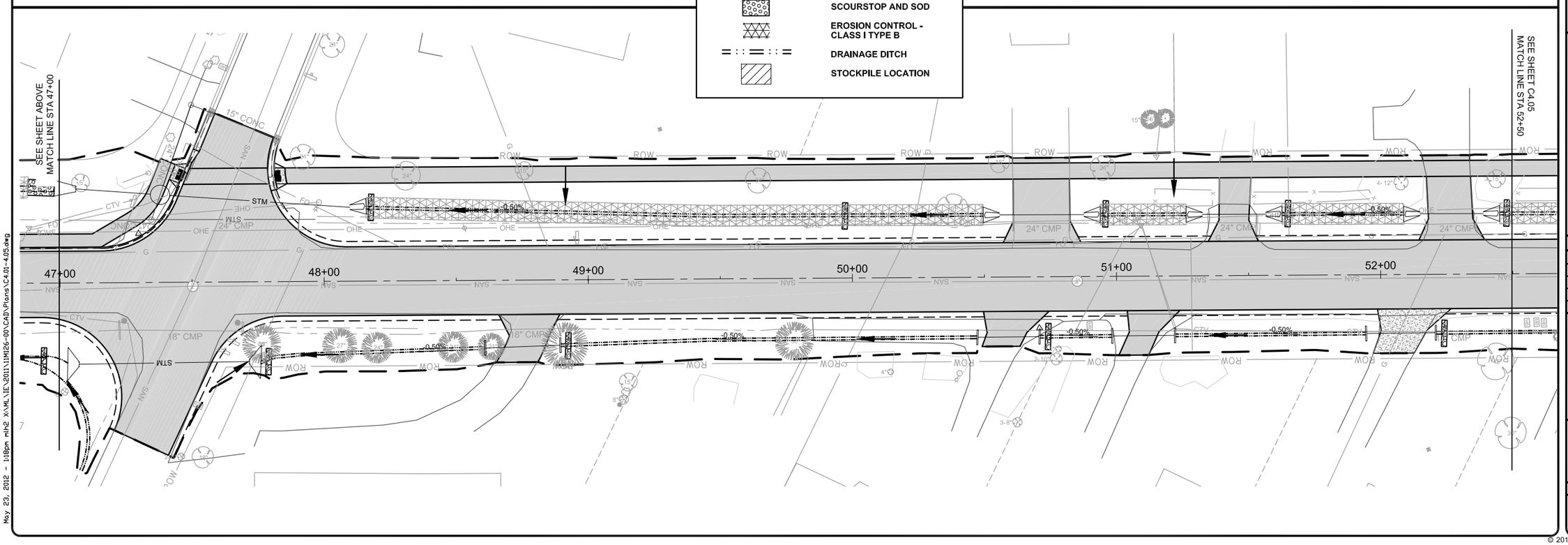

Foth

Foth Infrastructure & Environment, LLC
2504 Kohler Street
Suite 278, Lincoln Center II
West Allis, WI 53227
Phone: 414-336-7900 Fax: 414-336-7901

REUSE OF DOCUMENTS
THIS DOCUMENT HAS BEEN DEVELOPED FOR A SPECIFIC APPLICATION AND NOT FOR GENERAL USE. THEREFORE IT MAY NOT BE USED, WITHOUT THE WRITTEN CONSENT OF FOTH INFRASTRUCTURE AND ENVIRONMENT, LLC. ANY UNAPPROVED USE IS THE SOLE RESPONSIBILITY OF THE UNAUTHORIZED USER.

TESS CORNERS DRIVE RECONSTRUCTION

CITY OF MUSKEGO

WAUKESHA COUNTY

CITY OF MUSKEGO, WISCONSIN

REVISIONS			
NO.	BY	DATE	DESCRIPTION
△			
△			
△			
△			

RECORD DRAWING OF COMPLETED CONSTRUCTION BY

RECORD DRAWINGS OF COMPLETED CONSTRUCTION CONFORMING TO CONTRACTOR AND/OR OWNERS RECORDS.
BY _____ DATE _____

Date of Preparation:

	BY	DATE
SURVEYED	JSH	10/31/2011
DRAWN	MLH	05/24/2012
DESIGNED	MPS	05/24/2012
CHECKED	MKS	05/24/2012

TESS CORNERS DRIVE EROSION CONTROL

VERTICAL SCALE: 2 0

HORIZONTAL SCALE: 0 20 40

PROJECT ID 11M126.00

C4.04

SHEET 65 OF 79

© 2012 Foth Infrastructure & Environment, LLC

May 23, 2012 - 1:18pm mh2 X:\ML\IE\2011\11M126-00\CAD\Plans\C4.01-4.05.dwg

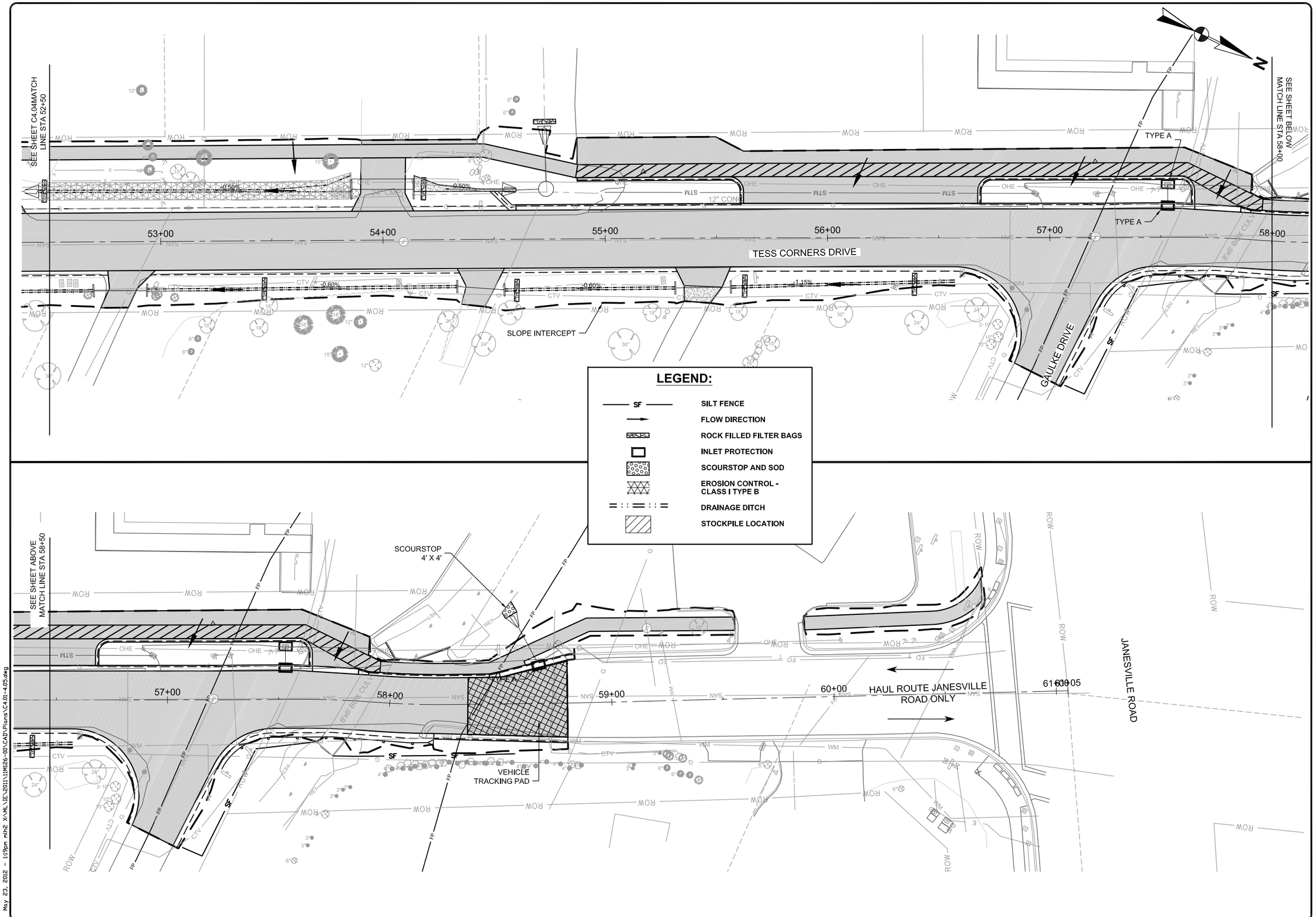

May 23, 2012 - 1:19pm mlh2 X:\ML\IE\2011\11M126-00\CAD\Plans\C4.01-4.05.dwg

Foth
Foth Infrastructure & Environment, LLC
2514 S. 102nd Street
Suite 278, Lincoln Center II
West Allis, WI 53227
Phone: 414-336-7900 Fax: 414-336-7901

REUSE OF DOCUMENTS
THIS DOCUMENT HAS BEEN DEVELOPED FOR A SPECIFIC APPLICATION AND NOT FOR GENERAL USE. THEREFORE IT MAY NOT BE USED WITHOUT THE WRITTEN APPROVAL OF FOTH INFRASTRUCTURE AND ENVIRONMENT, LLC. UNAPPROVED USE IS THE SOLE RESPONSIBILITY OF THE UNAUTHORIZED USER.

TESS CORNERS DRIVE RECONSTRUCTION

CITY OF MUSKEGO

WAUKESHA COUNTY

CITY OF MUSKEGO, WISCONSIN

REVISIONS

NO.	BY	DATE	DESCRIPTION
△			
△			
△			
△			

RECORD DRAWING OF COMPLETED CONSTRUCTION BY

RECORD DRAWINGS OF COMPLETED CONSTRUCTION CONFORMING TO CONTRACTOR AND/OR OWNERS RECORDS.
BY _____ DATE _____

Date of Preparation:

	BY	DATE
SURVEYED	JSH	10/31/2011
DRAWN	MLH	05/24/2012
DESIGNED	MPS	05/24/2012
CHECKED	MKS	05/24/2012

TESS CORNERS DRIVE EROSION CONTROL

VERTICAL SCALE: 0 2

HORIZONTAL SCALE: 0 20 40

PROJECT ID 11M126.00

C4.05

SHEET 66 OF 79

© 2012 Foth Infrastructure & Environment, LLC

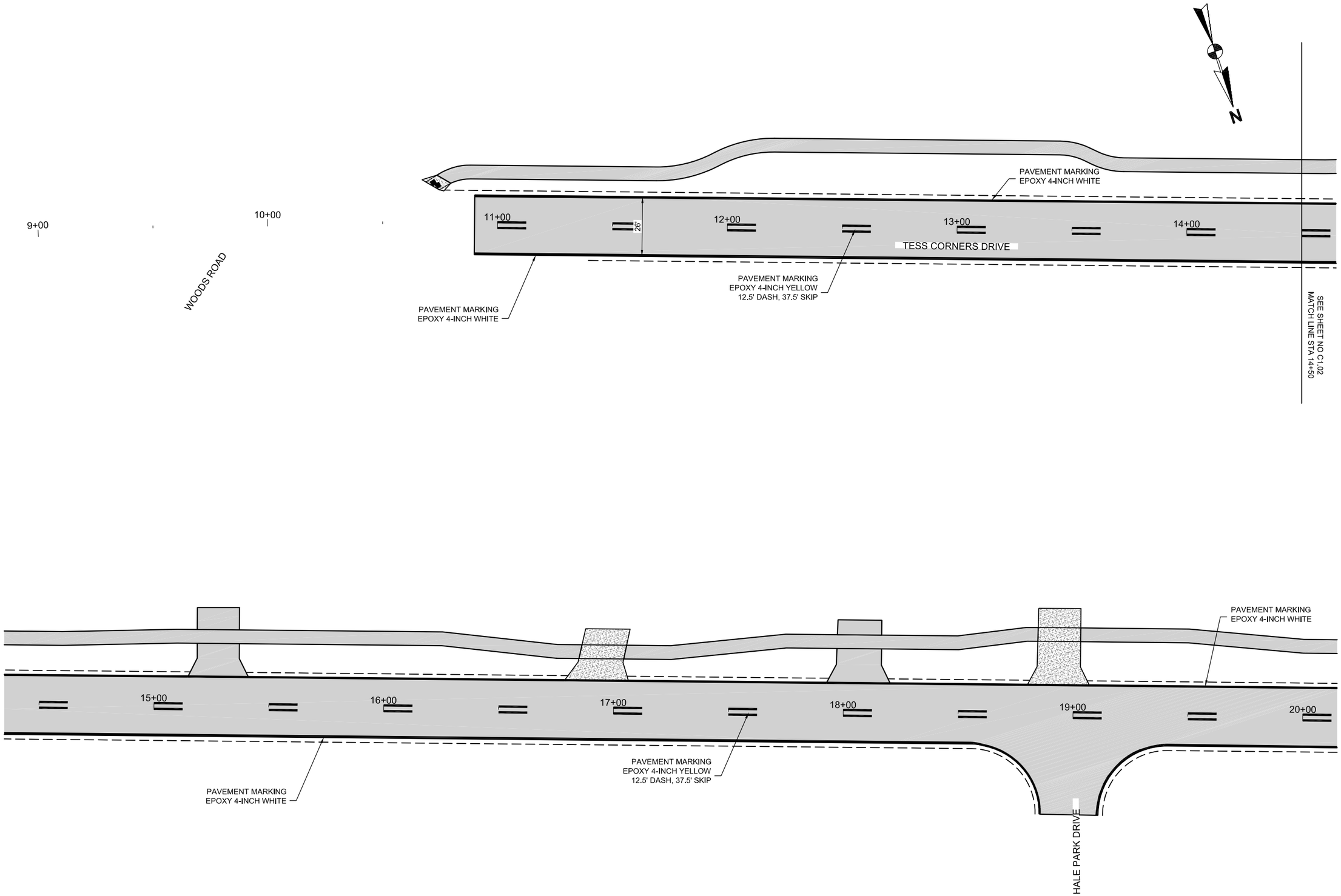

May 22, 2012 - 11:30am mlh2 X:\MLIE\2011\11M126-00\CAD\Plans\C406.dwg

Foth

Foth Infrastructure & Environment, LLC
2544 S. 108nd Street
Suite 278, Lincoln Center II
West Allis, WI 53227
Phone: 414-336-7900 Fax: 414-336-7901

REUSE OF DOCUMENTS
THIS DOCUMENT HAS BEEN DEVELOPED FOR A SPECIFIC APPLICATION AND NOT FOR GENERAL USE. THEREFORE IT MAY NOT BE USED WITHOUT THE WRITTEN APPROVAL OF FOTH INFRASTRUCTURE AND ENVIRONMENT, LLC. UNAPPROVED USE IS THE SOLE RESPONSIBILITY OF THE UNAUTHORIZED USER.

TESS CORNERS DRIVE RECONSTRUCTION

CITY OF MUSKEGO

WAUKESHA COUNTY CITY OF MUSKEGO, WISCONSIN

REVISIONS			
NO.	BY	DATE	DESCRIPTION
△			
△			
△			
△			

RECORD DRAWING OF COMPLETED CONSTRUCTION BY

RECORD DRAWINGS OF COMPLETED CONSTRUCTION CONFORMING TO CONTRACTOR AND/OR OWNERS RECORDS.
BY _____ DATE _____

Date of Preparation:

	BY	DATE
SURVEYED	JSH	10/31/2011
DRAWN	MLH	05/24/2012
DESIGNED	MPS	05/24/2012
CHECKED	MKS	05/24/2012

TESS CORNERS DRIVE PAVEMENT MARKING

VERTICAL SCALE: 0 2

HORIZONTAL SCALE: 0 20 40

PROJECT ID 11M126.00

C4.06

SHEET 67 OF 79

© 2012 Foth Infrastructure & Environment, LLC

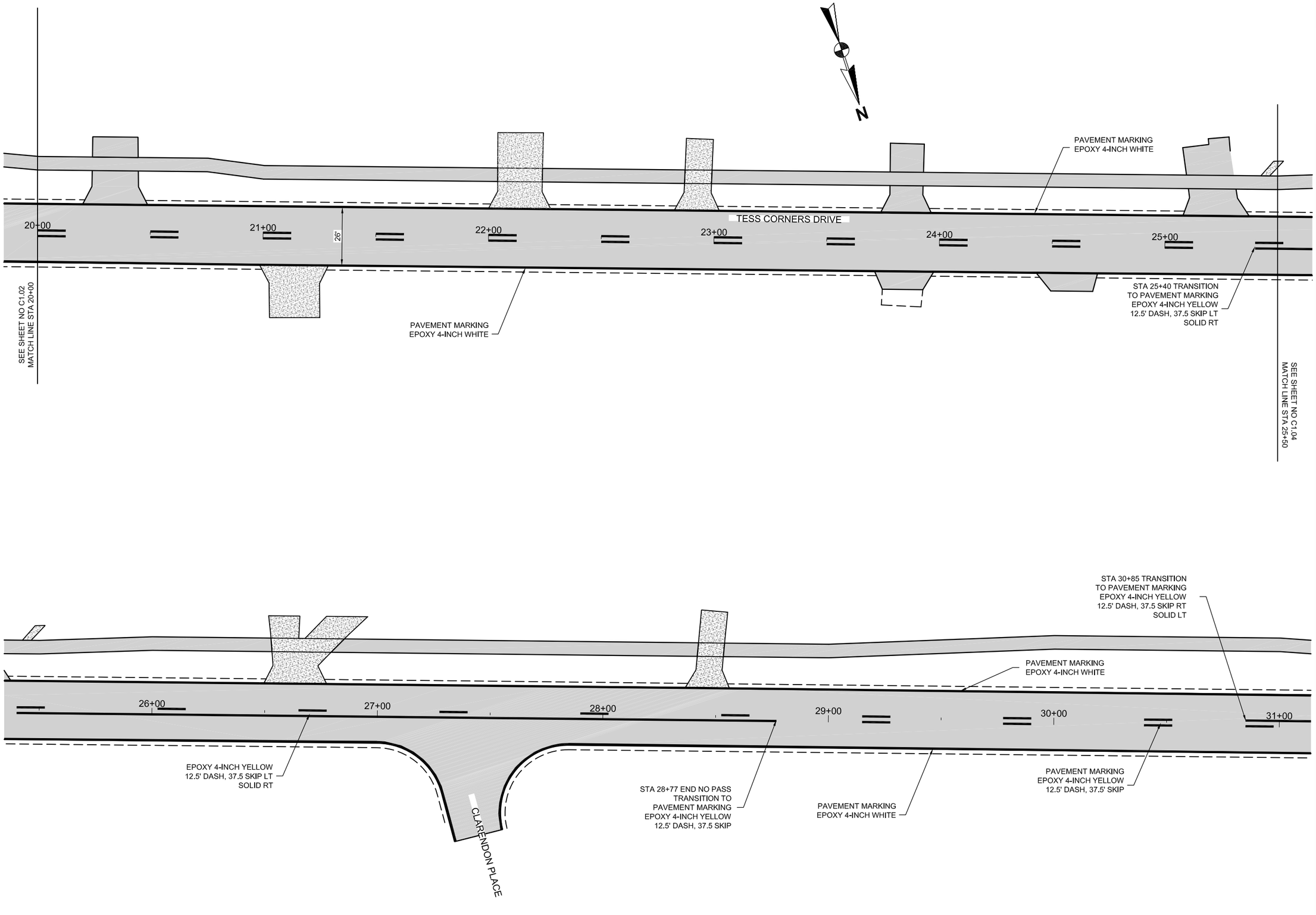

May 22, 2012 - 11:32am mlh2 X:\ML\IE\2011\11M126-00\CAD\Plans\C4.07.dwg

Foth Infrastructure & Environment, LLC
2514 S. 102nd Street
Suite 278, Lincoln Center II
West Allis, WI 53227
Phone: 414-336-7900 Fax: 414-336-7901

REUSE OF DOCUMENTS
THIS DOCUMENT HAS BEEN DEVELOPED FOR A SPECIFIC APPLICATION AND NOT FOR GENERAL USE. THEREFORE IT MAY NOT BE USED WITHOUT THE WRITTEN APPROVAL OF FOTH INFRASTRUCTURE AND ENVIRONMENT, LLC. UNAPPROVED USE IS THE SOLE RESPONSIBILITY OF THE UNAUTHORIZED USER.

TESS CORNERS DRIVE RECONSTRUCTION

CITY OF MUSKEGO

WAUKESHA COUNTY

CITY OF MUSKEGO, WISCONSIN

REVISIONS

NO.	BY	DATE	DESCRIPTION
△			
△			
△			
△			

RECORD DRAWING OF COMPLETED CONSTRUCTION BY

RECORD DRAWINGS OF COMPLETED CONSTRUCTION CONFORMING TO CONTRACTOR AND/OR OWNERS RECORDS.
BY _____ DATE _____

Date of Preparation:

	BY	DATE
SURVEYED	JSH	10/31/2011
DRAWN	MLH	05/24/2012
DESIGNED	MPS	05/24/2012
CHECKED	MKS	05/24/2012

TESS CORNERS DRIVE PAVEMENT MARKING

VERTICAL SCALE: 0 2

HORIZONTAL SCALE: 0 20 40

PROJECT ID 11M126.00

C4.07

SHEET 68 OF 79

© 2012 Foth Infrastructure & Environment, LLC

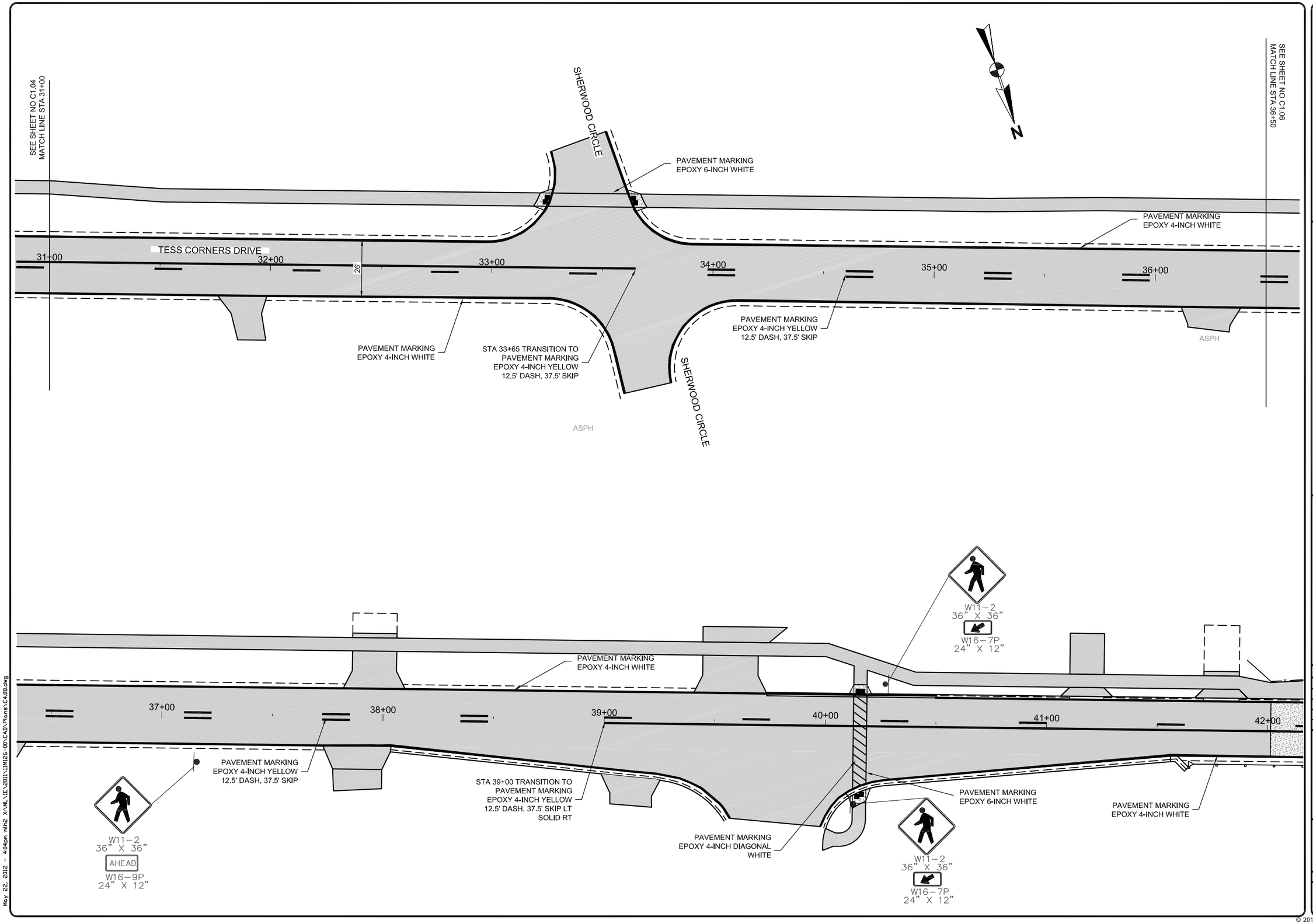

Foth
Foth Infrastructure & Environment, LLC
2544 S. 108th Street
Suite 278, Lincoln Center II
West Allis, WI 53227
Phone: 414-336-7900 Fax: 414-336-7901

REUSE OF DOCUMENTS
THIS DOCUMENT HAS BEEN DEVELOPED FOR A SPECIFIC APPLICATION AND NOT FOR GENERAL USE. THEREFORE IT MAY NOT BE USED WITHOUT THE WRITTEN APPROVAL OF FOTH INFRASTRUCTURE AND ENVIRONMENT, LLC. UNAPPROVED USE IS THE SOLE RESPONSIBILITY OF THE UNAUTHORIZED USER.

TESS CORNERS DRIVE RECONSTRUCTION

CITY OF MUSKEGO

WAUKESHA COUNTY CITY OF MUSKEGO, WISCONSIN

REVISIONS			
NO.	BY	DATE	DESCRIPTION
△			
△			
△			
△			

RECORD DRAWING OF COMPLETED CONSTRUCTION BY

RECORD DRAWINGS OF COMPLETED CONSTRUCTION CONFORMING TO CONTRACTOR AND/OR OWNERS RECORDS.
BY _____ DATE _____

Date of Preparation:

	BY	DATE
SURVEYED	JSH	10/31/2011
DRAWN	MLH	05/24/2012
DESIGNED	MPS	05/24/2012
CHECKED	MKS	05/24/2012

TESS CORNERS DRIVE PAVEMENT MARKING

VERTICAL SCALE: 0 2
HORIZONTAL SCALE: 0 20 40

PROJECT ID 11M126.00

C4.08
SHEET 69 OF 79

© 2012 Foth Infrastructure & Environment, LLC

May 22, 2012 - 4:04pm mlh2 X:\ML\IE\2011\11M126-00\CAD\Plans\C4.08.dwg

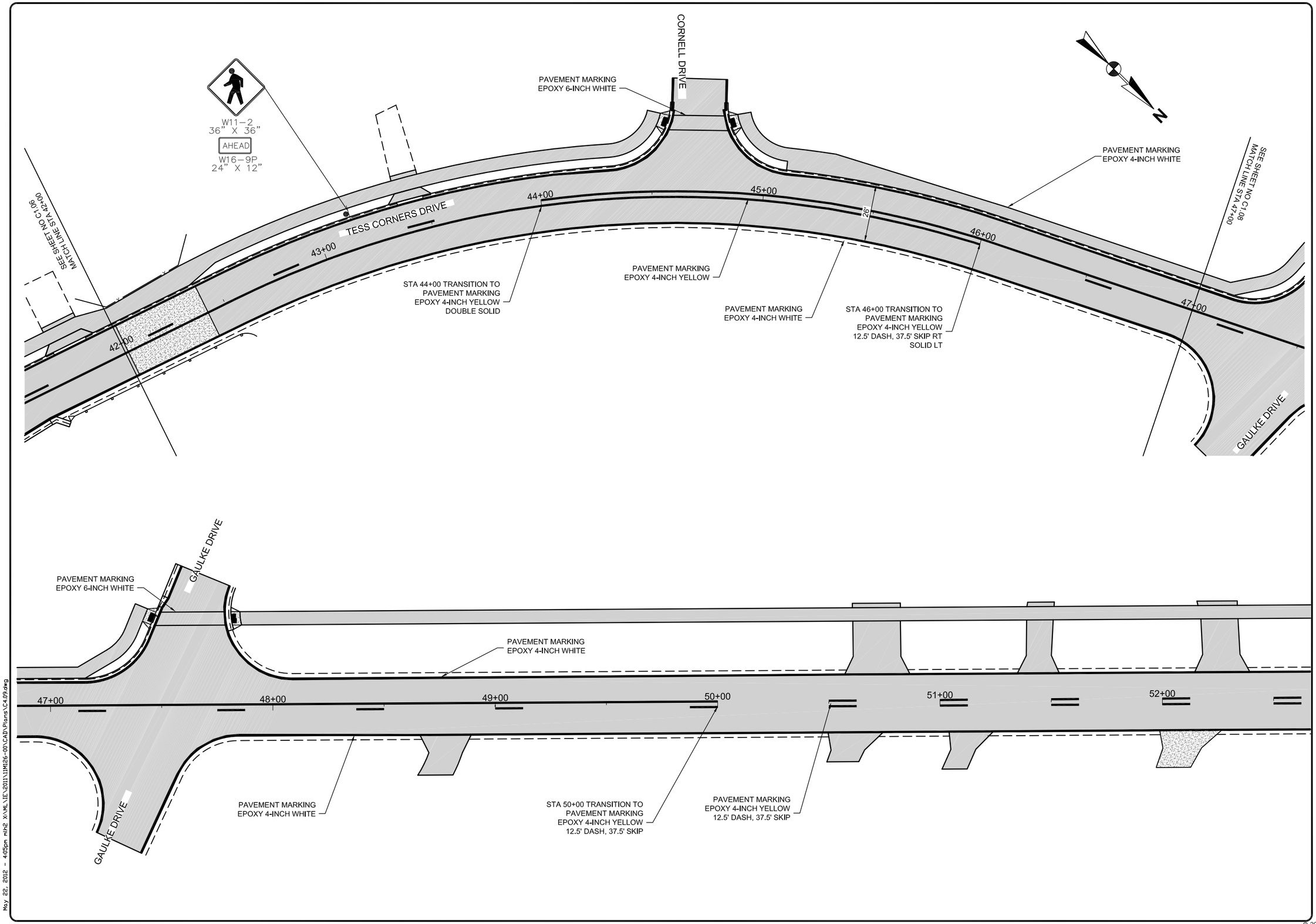

May 22, 2012 - 4:05pm mlh2 X:\ML\IE\2011\11M126-00\CAD\Plans\C4.09.dwg

Foth
Foth Infrastructure & Environment, LLC
2514 S. 102nd Street
Suite 278, Lincoln Center II
West Allis, WI 53227
Phone: 414-336-7900 Fax: 414-336-7901

REUSE OF DOCUMENTS
THIS DOCUMENT HAS BEEN DEVELOPED FOR A SPECIFIC APPLICATION AND NOT FOR GENERAL USE. THEREFORE IT MAY NOT BE USED WITHOUT THE WRITTEN APPROVAL OF FOTH INFRASTRUCTURE AND ENVIRONMENT, LLC. UNAPPROVED USE IS THE SOLE RESPONSIBILITY OF THE UNAUTHORIZED USER.

TESS CORNERS DRIVE RECONSTRUCTION

CITY OF MUSKEGO

WAUKESHA COUNTY CITY OF MUSKEGO, WISCONSIN

REVISIONS

NO.	BY	DATE	DESCRIPTION
△			
△			
△			
△			

RECORD DRAWING OF COMPLETED CONSTRUCTION BY

RECORD DRAWINGS OF COMPLETED CONSTRUCTION CONFORMING TO CONTRACTOR AND/OR OWNERS RECORDS.
BY _____ DATE _____

Date of Preparation:

	BY	DATE
SURVEYED	JSH	10/31/2011
DRAWN	MLH	05/24/2012
DESIGNED	MPS	05/24/2012
CHECKED	MKS	05/24/2012

TESS CORNERS DRIVE PAVEMENT MARKING

VERTICAL SCALE: 0 2

HORIZONTAL SCALE: 0 20 40

PROJECT ID 11M126.00

C4.09

SHEET 70 OF 79

© 2012 Foth Infrastructure & Environment, LLC

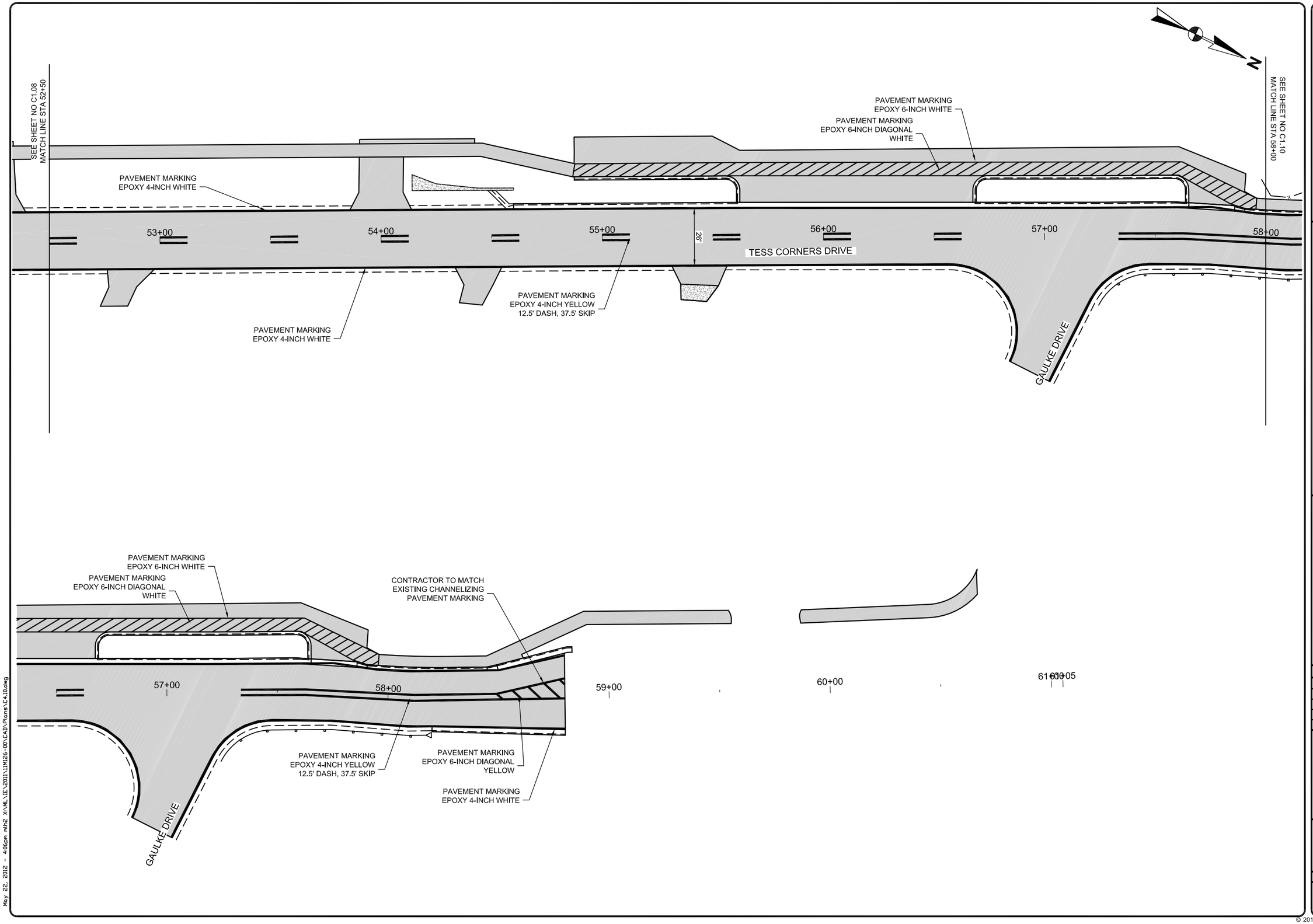

May 22, 2012 - 4:06pm mlh2 X:\ML\IE\2011\11M126-00\CAD\Plans\C4.10.dwg

Foth

Foth Infrastructure & Environment, LLC
2544 S. 170th Street
Suite 278, Lincoln Center II
West Allis, WI 53227
Phone: 414-336-7900 Fax: 414-336-7901

REUSE OF DOCUMENTS
THIS DOCUMENT HAS BEEN DEVELOPED FOR A SPECIFIC APPLICATION AND NOT FOR GENERAL USE. THEREFORE IT MAY NOT BE USED WITHOUT THE WRITTEN CONSENT OF FOTH INFRASTRUCTURE AND ENVIRONMENT, LLC. UNAPPROVED USE IS THE SOLE RESPONSIBILITY OF THE UNAUTHORIZED USER.

TESS CORNERS DRIVE RECONSTRUCTION

CITY OF MUSKEGO

WAUKESHA COUNTY CITY OF MUSKEGO, WISCONSIN

NO.	BY	DATE	DESCRIPTION
△			
△			
△			
△			

REVISIONS

RECORD DRAWING OF COMPLETED CONSTRUCTION BY

RECORD DRAWINGS OF COMPLETED CONSTRUCTION CONFORMING TO CONTRACTOR AND/OR OWNERS RECORDS.
BY _____ DATE _____

Date of Preparation:

	BY	DATE
SURVEYED	JSH	10/31/2011
DRAWN	MLH	05/24/2012
DESIGNED	MPS	05/24/2012
CHECKED	MKS	05/24/2012

TESS CORNERS DRIVE PAVEMENT MARKING

VERTICAL SCALE: 0 2

HORIZONTAL SCALE: 0 20 40

PROJECT ID 11M126.00

C4.10

SHEET 71 OF 79

© 2012 Foth Infrastructure & Environment, LLC

NOTES:

1. THE CONTRACTOR SHALL INSTALL ALL TEMPORARY EROSION CONTROL MEASURES PRIOR TO CONSTRUCTION ON THE CULVERTS.
2. WORK SHALL ONLY BE DONE UNDER LOW FLOW.
3. ALL CULVERT EXTENSION WORK IS TO BE COMPLETE WITHIN 6 DAYS.
4. CONSTRUCTION IS ANTICIPATED TO BEGIN IN JUNE OF 2012.
5. CONTRACTOR SHALL MOBILIZE ALL EQUIPMENT AND INSTALL ALL TRAFFIC CONTROL PRIOR TO CONSTRUCTION ACTIVITIES BEGINNING.
6. WHEN EXTENDING CULVERTS AND CONSTRUCTING ENDWALLS, AT LEAST ONE CULVERT MUST BE OPERATIONAL AT ALL TIMES TO ACCOMMODATE POSSIBLE FLOW.
7. WHEN EXTENDING A CULVERT, APPLY SANDBAGS TO UPSTREAM END AND SILTFENCE TO DOWNSTREAM END TO DIVERT FLOW TO REMAINING CULVERTS.
8. SEE SHEET C5.03 FOR ENDWALL DETAILS.
9. INCIDENTAL AMOUNTS OF SEDIMENT THAT ARE EXCAVATED DURING CULVERT EXTENSION SHOULD BE REUSED IN PROJECT AREA.
10. FERTILIZER (LIQUID OR GRANULAR) SHOULD NOT BE USED ON RE-VEGETATED AREAS THAT ARE ADJACENT TO WETLANDS OR WATERWAYS.

TEMPORARY COVER CROPS SHOULD BE USED IN THESE SENSITIVE AREAS.

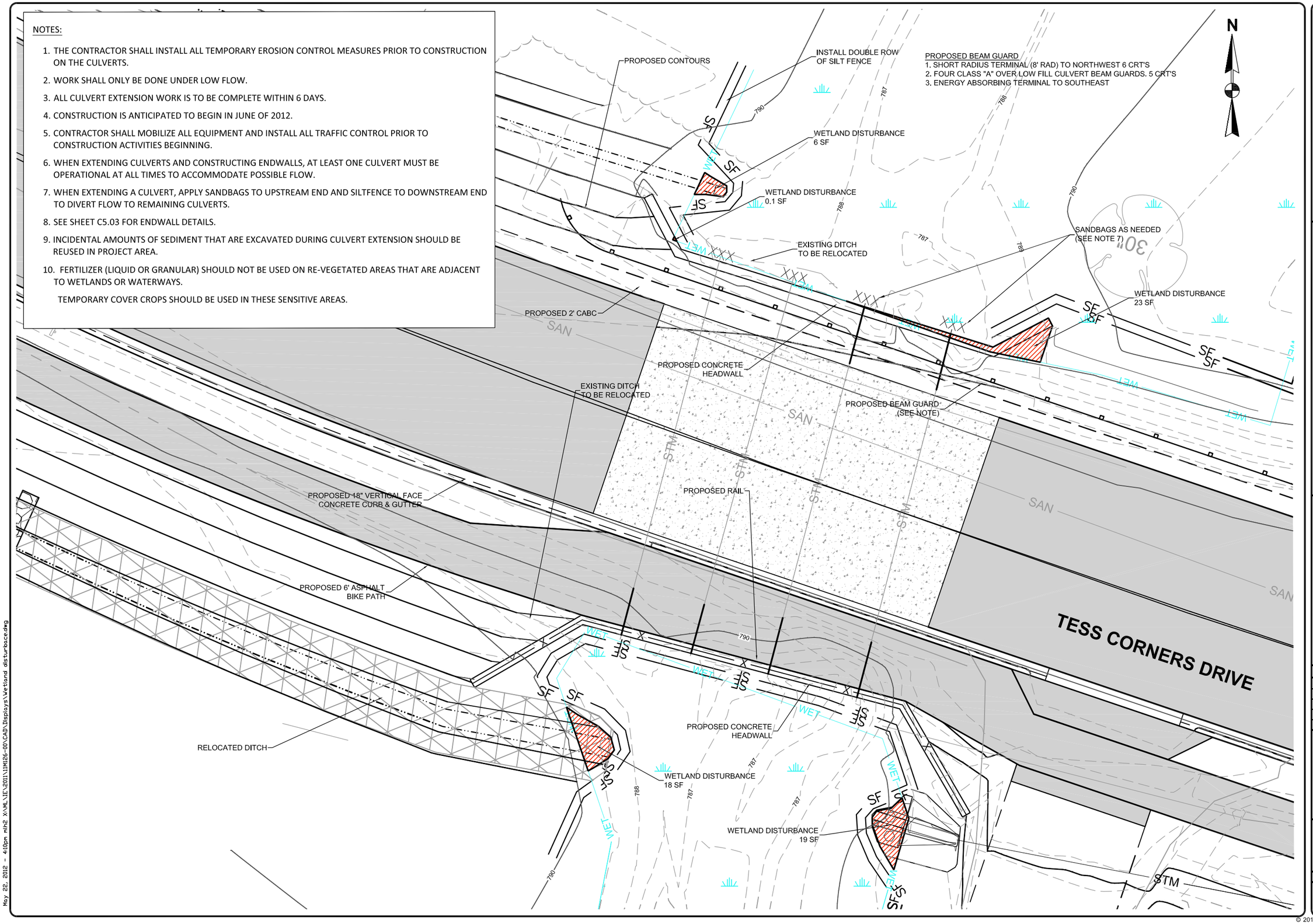

May 22, 2012 - 4:10pm mlh2 X:\ML\IE\2011\11M126-00\CAD\Displays\Wetland disturbace.dwg

Foth
Foth Infrastructure & Environment, LLC
2514 S. 102nd Street
Suite 278, Lincoln Center II
West Allis, WI 53227
Phone: 414-336-7900 Fax: 414-336-7901

REUSE OF DOCUMENTS
THIS DOCUMENT HAS BEEN DEVELOPED FOR A SPECIFIC APPLICATION AND NOT FOR GENERAL USE. THEREFORE IT MAY NOT BE USED WITHOUT THE WRITTEN APPROVAL OF FOTH INFRASTRUCTURE AND ENVIRONMENT, LLC. UNAPPROVED USE IS THE SOLE RESPONSIBILITY OF THE UNAUTHORIZED USER.

TESS CORNERS DRIVE RECONSTRUCTION

CITY OF MUSKEGO

WAUKESHA COUNTY

CITY OF MUSKEGO, WISCONSIN

REVISIONS

NO.	BY	DATE	DESCRIPTION
△			
△			
△			
△			

RECORD DRAWING OF COMPLETED CONSTRUCTION BY _____

RECORD DRAWINGS OF COMPLETED CONSTRUCTION CONFORMING TO CONTRACTOR AND/OR OWNERS RECORDS. BY _____ DATE _____

Date of Preparation:

	BY	DATE
SURVEYED	JSH	10/31/2011
DRAWN	MLH	05/24/2012
DESIGNED	MPS	05/24/2012
CHECKED	MKS	05/24/2012

CULVERT PLAN

SCALE
0 5 10

PROJECT ID 11M126.00

C4.11

SHEET 72 OF 79

© 2012 Foth Infrastructure & Environment, LLC

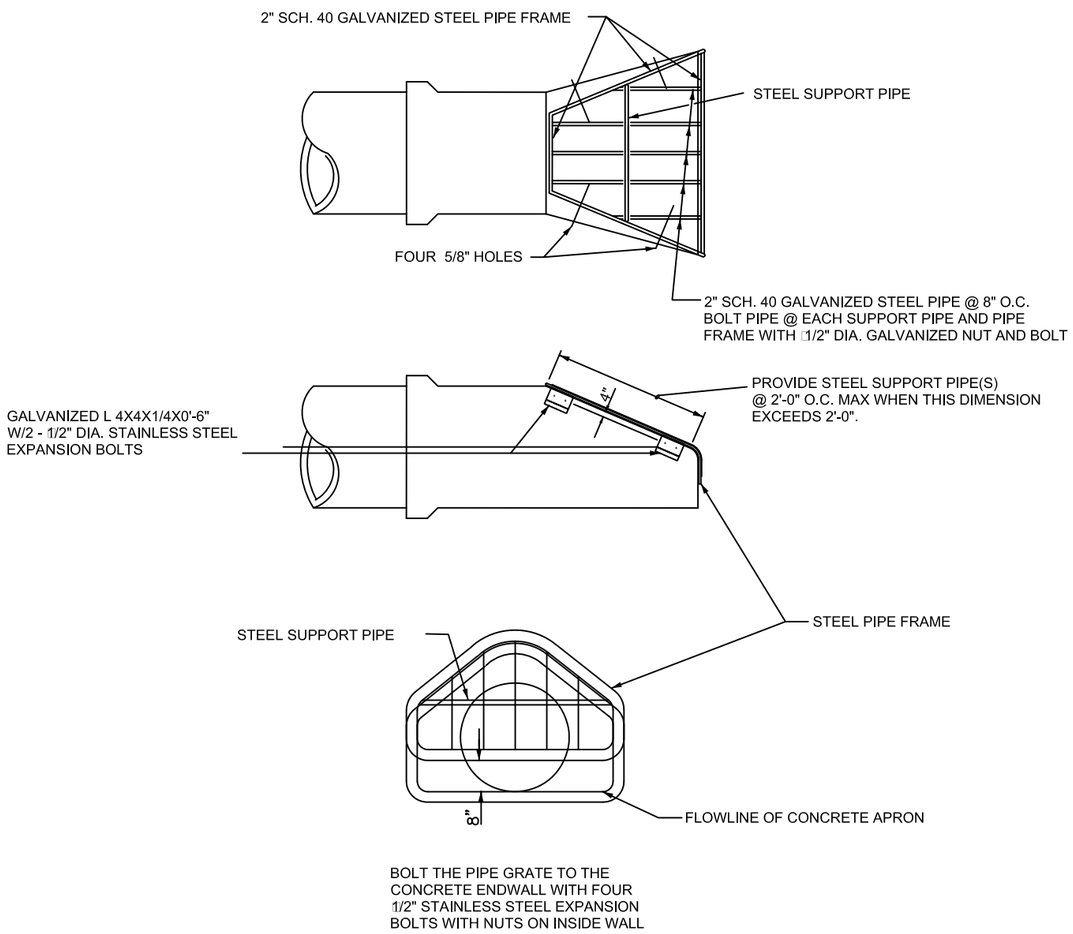

PIPE FRAME AND SUPPORT PIPE DIAMETER	MAXIMUM CONCRETE PIPE DIAMETER
1 1/2" SCHEDULE 40, ASTM A53	36"
2" SCHEDULE 40, ASTM A53	48"
2 1/2" SCHEDULE 40, ASTM A53	60"
3 " SCHEDULE 40, ASTM A53	84"
GALVANIZING, ASTM A123	
STEEL ANGLE, ASTM A36	

TRASH RACK DETAIL

C5.01 | 1

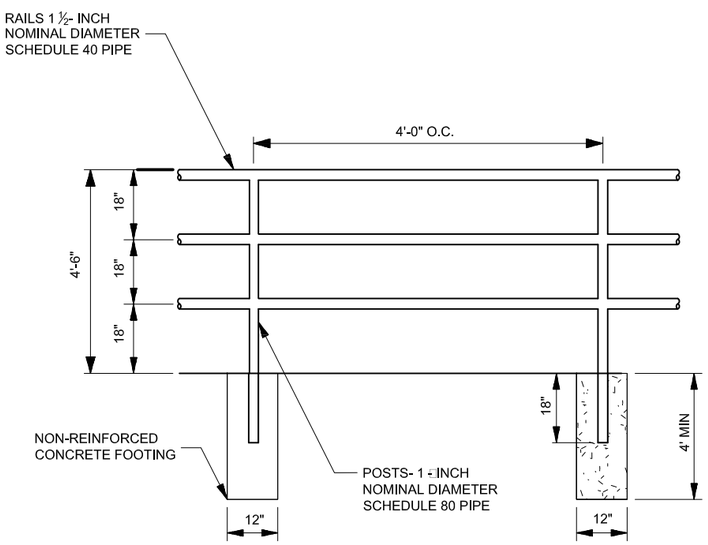

RAILING PIPE DETAIL

C5.01 | 2

NOTE: PLACE RAILING .75'
FROM EDGE OF PATH

Foth

Foth Infrastructure & Environment, LLC
2544 S. 108th Street
Suite 278, Lincoln Center II
West Allis, WI 53227
Phone: 414-336-7900 Fax: 414-336-7901

REUSE OF DOCUMENTS
THIS DOCUMENT HAS BEEN DEVELOPED FOR A SPECIFIC APPLICATION AND NOT FOR GENERAL USE. THEREFORE IT MAY NOT BE USED WITHOUT THE WRITTEN APPROVAL OF FOTH INFRASTRUCTURE AND ENVIRONMENT, LLC. UNAPPROVED USE IS THE SOLE RESPONSIBILITY OF THE UNAUTHORIZED USER.

TESS CORNERS DRIVE RECONSTRUCTION

CITY OF MUSKEGO

WAUKESHA COUNTY CITY OF MUSKEGO, WISCONSIN

REVISIONS			
NO.	BY	DATE	DESCRIPTION
△			
△			
△			
△			

RECORD DRAWING OF COMPLETED CONSTRUCTION BY

RECORD DRAWINGS OF COMPLETED CONSTRUCTION CONFORMING TO CONTRACTOR AND/OR OWNERS RECORDS.
BY _____
DATE _____

Date of Preparation:

	BY	DATE
SURVEYED	JSH	10/31/2011
DRAWN	MLH	05/24/2012
DESIGNED	MPS	05/24/2012
CHECKED	MKS	05/24/2012

TESS CORNERS

CONSTRUCTION DETAILS

NTS

PROJECT ID 11M126.00

C5.01

SHEET 73 OF 79

© 2012 Foth Infrastructure & Environment, LLC

May 22, 2012 - 11:56am mlh2 X:\MLI\E\2011\11M126-00\CAD\Plans\C5.01 - Details.dwg

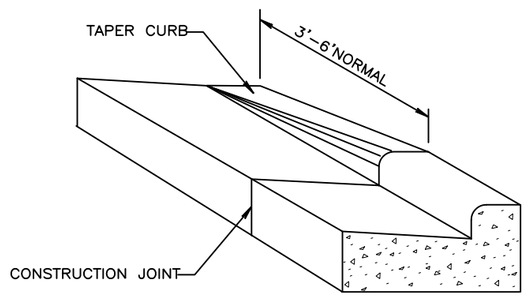

DETAIL OF CURB & GUTTER TERMINI

C5.02 | 1

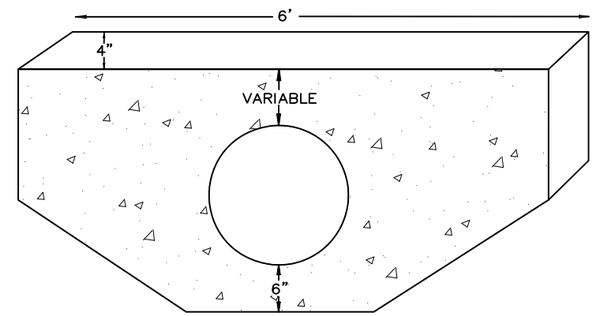

DRIVEWAY CULVERT CONCRETE ENDWALL DETAIL

C5.02 | 2

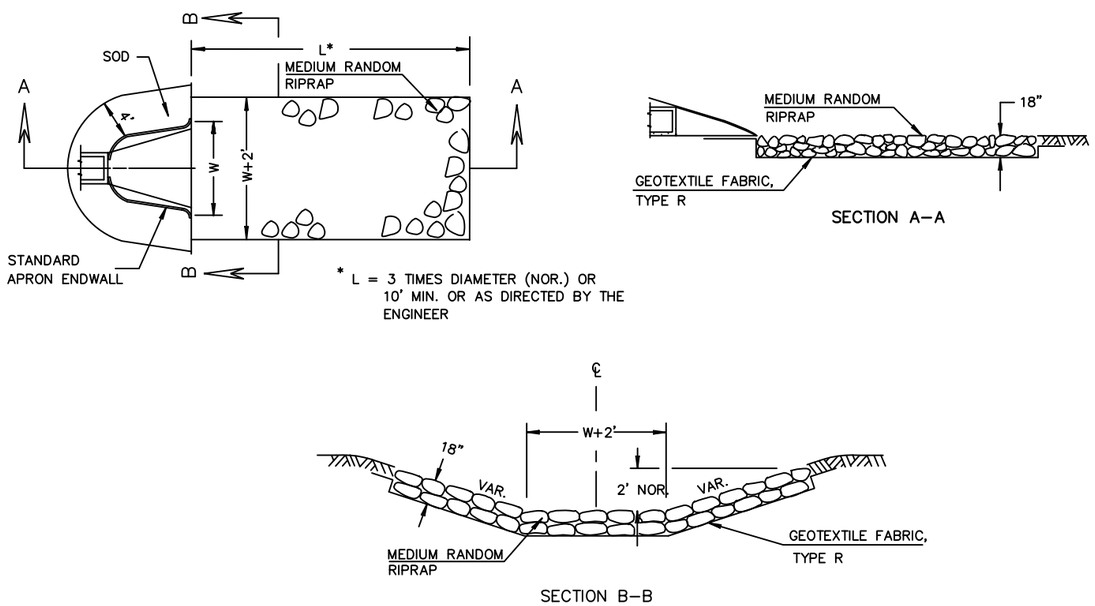

SOD, MEDIUM RANDOM RIPRAP AND GEOTEXTILE FABRIC DETAIL AT APRON ENDWALLS

C5.02 | 3

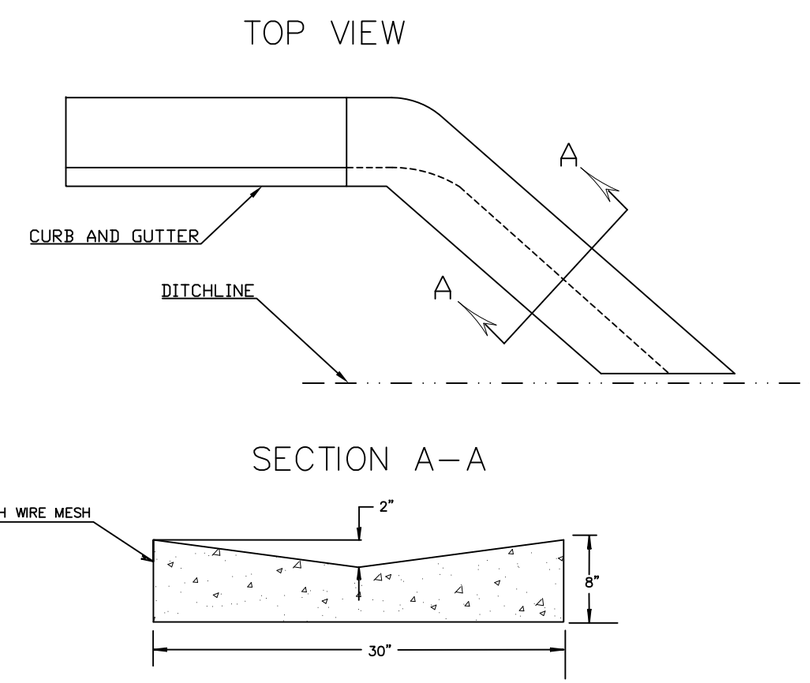

CURB AND GUTTER FLUME DETAIL

C5.02 | 4

Foth
Foth Infrastructure & Environment, LLC
2514 S. 102nd Street
Suite 278, Lincoln Center II
West Allis, WI 53227
Phone: 414-336-7900 Fax: 414-336-7901

REUSE OF DOCUMENTS
THIS DOCUMENT HAS BEEN DEVELOPED FOR A SPECIFIC APPLICATION AND NOT FOR GENERAL USE. THEREFORE IT MAY NOT BE USED WITHOUT THE WRITTEN APPROVAL OF FOTH INFRASTRUCTURE AND ENVIRONMENT, LLC. UNAPPROVED USE IS THE SOLE RESPONSIBILITY OF THE UNAUTHORIZED USER.

TESS CORNERS DRIVE RECONSTRUCTION

CITY OF MUSKEGO

WAUKESHA COUNTY CITY OF MUSKEGO, WISCONSIN

REVISIONS

NO.	BY	DATE	DESCRIPTION
△			
△			
△			
△			

RECORD DRAWING OF COMPLETED CONSTRUCTION BY

RECORD DRAWINGS OF COMPLETED CONSTRUCTION CONFORMING TO CONTRACTOR AND/OR OWNERS RECORDS.
BY _____ DATE _____

Date of Preparation:

	BY	DATE
SURVEYED	JSH	10/31/2011
DRAWN	MLH	05/24/2012
DESIGNED	MPS	05/24/2012
CHECKED	MKS	05/24/2012

TESS CORNERS

CONSTRUCTION DETAILS

NTS

PROJECT ID 11M126.00

C5.02

SHEET 74 OF 79

© 2012 Foth Infrastructure & Environment, LLC

May 22, 2012 - 11:58am mlh2 X:\ML\IE\2011\11M126-00\CAD\Plans\C5.02 - Details.dwg

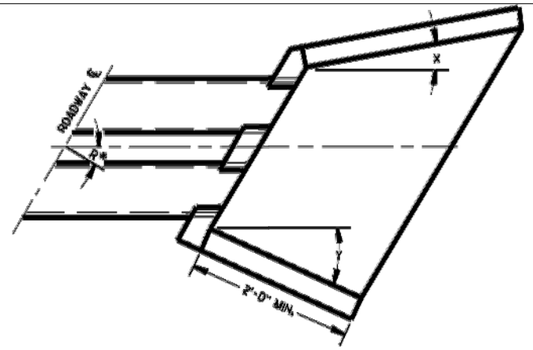

WINGWALL ANGLE DETAILS

INLET			OUTLET		
R*	X	Y	R*	X	Y
0 - 7°	30°	30°	0 - 15°	15°	15°
8 - 22°	25°	"	16 - 45°	10°	"
23 - 37°	20°	"	46 - 75°	5°	"
38 - 52°	15°	"	OVER 75°	0°	"
53 - 67°	10°	"			
68 - 82°	5°	"			
OVER 82°	0°	"			

*R = NUMBER OF DEGREES RIGHT OR LEFT HAND FORWARD

GENERAL NOTES

DETAILS OF CONSTRUCTION, MATERIALS AND WORKMANSHIP NOT SHOWN ON THIS DRAWING SHALL CONFORM TO THE PERTINENT REQUIREMENTS OF THE STANDARD SPECIFICATIONS AND THE APPLICABLE SPECIAL PROVISIONS.

FILL SLOPES FLATTER THAN 2 ½:1 SHALL BE WARPED TO MEET THE TOP OF THE WINGWALLS.

ALL STEEL REINFORCEMENT AND WELDED STEEL WIRE FABRIC SHALL BE EMBEDDED 2 INCHES CLEAR UNLESS OTHERWISE NOTED.

(1) MINIMUM REINFORCEMENT SHALL BE 6" X 6" - W4.0 X W4.0 OR NO. 3 BARS SPACED 12" C-C IN BOTH DIRECTIONS.

(2) THE SPACE BETWEEN PIPES SHALL BE AS FOLLOWS:

DIAMETER OR SPAN	SPACE
UP TO AND INCLUDING 48"	2'-0"
OVER 48" TO 72"	½ DIA. OR SPAN
OVER 72"	3'-0"

NOTE:
PIPE GRATES OR TRASH RACKS SHALL NOT BE USED ON EITHER END OF THE 67" x 95" CMPA'S OR EITHER END OF THE 55" x 73" CMPA'S.

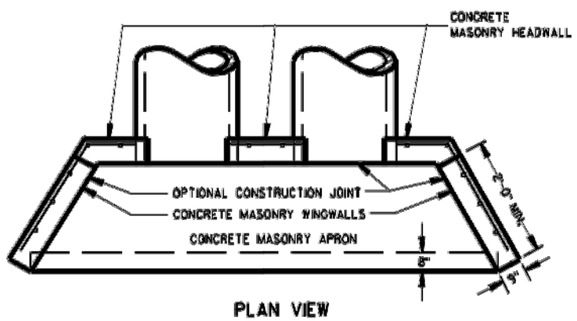

PLAN VIEW

CULVERT PIPE AND PIPE ARCH

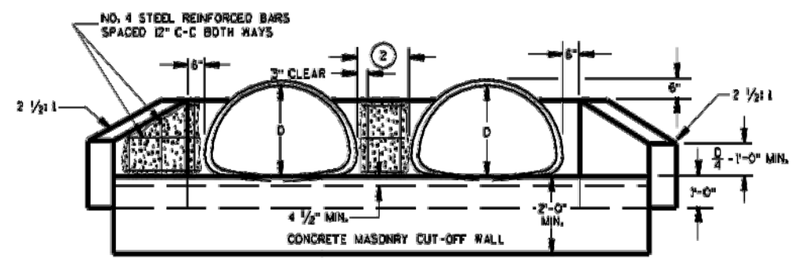

END ELEVATION

PIPE ARCH

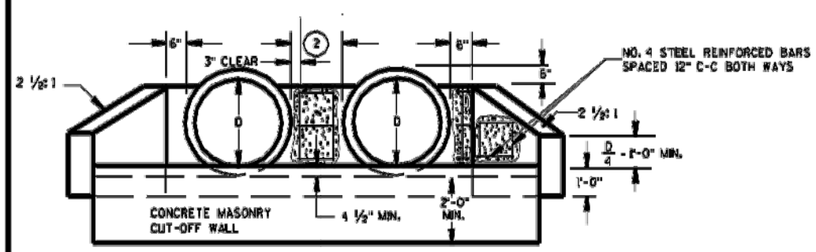

END ELEVATION

CULVERT PIPE

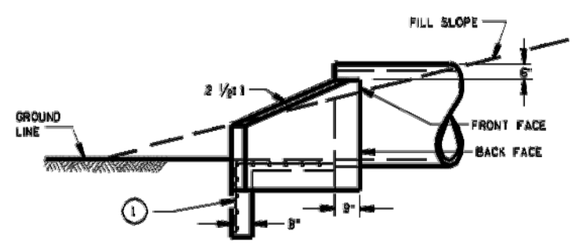

SIDE ELEVATION

CULVERT PIPE AND PIPE ARCH

C5.03 | 1

CONCRETE MASONRY ENDWALLS FOR CULVERT PIPE AND PIPE ARCH

STATE OF WISCONSIN
DEPARTMENT OF TRANSPORTATION

APPROVED

DATE — CHIEF ROADWAY DEVELOPMENT ENGINEER

FHWA

S.D.D. 8 F 10-1

Foth Infrastructure & Environment, LLC
5544 S. 108th Street
Suite 278, Lincoln Center II
West Allis, WI 53227
Phone: 414-336-7900 Fax: 414-336-7901

REUSE OF DOCUMENTS
THIS DOCUMENT HAS BEEN DEVELOPED FOR A SPECIFIC APPLICATION AND NOT FOR GENERAL USE. THEREFORE IT MAY NOT BE USED WITHOUT THE EXPRESSED WRITTEN APPROVAL OF FOTH INFRASTRUCTURE & ENVIRONMENT, LLC. UNAPPROVED USE IS THE SOLE RESPONSIBILITY OF THE UNAUTHORIZED USER.

TESS CORNERS DRIVE RECONSTRUCTION

CITY OF MUSKEGO

WAUKESHA COUNTY — CITY OF MUSKEGO, WISCONSIN

NO.	BY	DATE	DESCRIPTION
△			
△			
△			
△			

REVISIONS

RECORD DRAWING OF COMPLETED CONSTRUCTION BY

RECORD DRAWINGS OF COMPLETED CONSTRUCTION CONFORMING TO CONTRACTOR AND/OR OWNERS RECORDS.
BY _____ DATE _____

Date of Preparation:

	BY	DATE
SURVEYED	JSH	10/31/2011
DRAWN	MLH	05/24/2012
DESIGNED	MPS	05/24/2012
CHECKED	MKS	05/24/2012

TESS CORNERS

CULVERT DETAILS

NTS

PROJECT ID 11M126.00

C5.03

SHEET 75 OF 79

© 2012 Foth Infrastructure & Environment, LLC

May 22, 2012 - 11:59am mlh2 X:\ML\IE\2011\11M126-00\CAD\Plans\C5.03 - Details.dwg

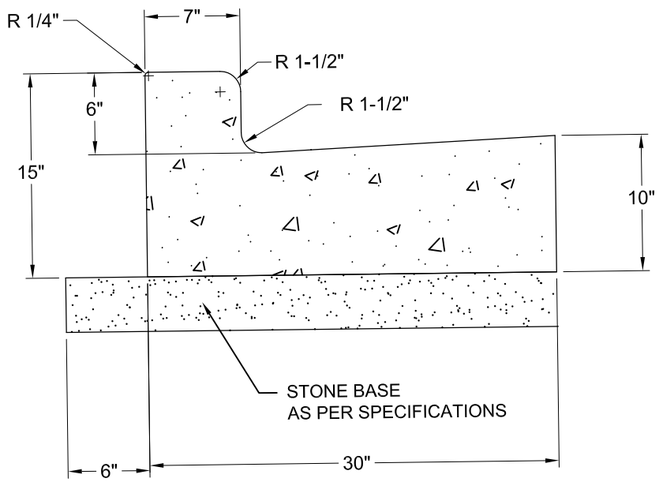

30" CURB & GUTTER

C5.04 | 1

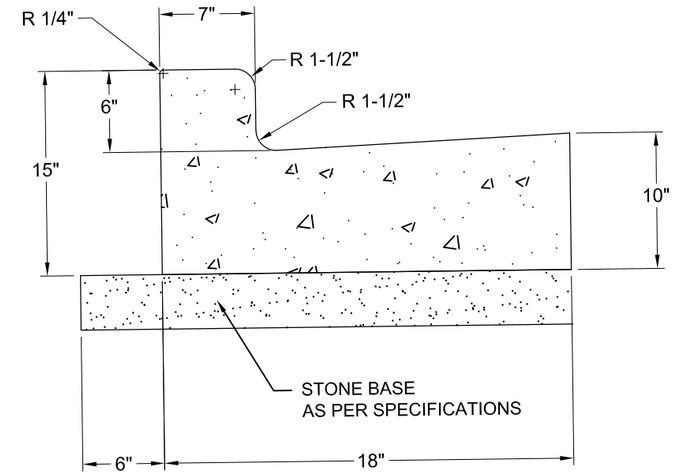

18" CURB & GUTTER

C5.04 | 2

NOTE: HIGH SIDE CURB AND GUTTER (REVERSE SLOPE) IN SUPER ELEVATION AREAS, PAN SLOPE SHALL MATCH CROSS SLOPE OF PAVEMENT.

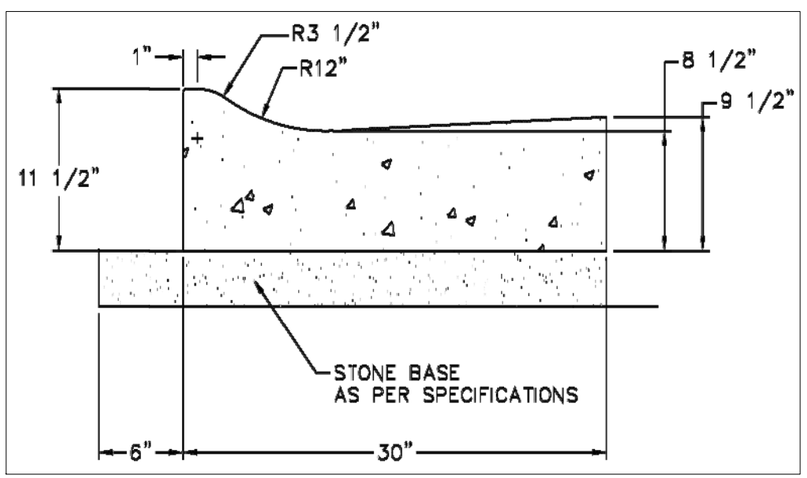

30" MOUNTABLE CURB & GUTTER

C5.04 | 3

Foth
Foth Infrastructure & Environment, LLC
2514 S. 102nd Street
Suite 278, Lincoln Center II
West Allis, WI 53227
Phone: 414-336-7900 Fax: 414-336-7901

REUSE OF DOCUMENTS
THIS DOCUMENT HAS BEEN DEVELOPED FOR A SPECIFIC APPLICATION AND NOT FOR GENERAL USE. THEREFORE IT MAY NOT BE USED WITHOUT THE WRITTEN APPROVAL OF FOTH INFRASTRUCTURE AND ENVIRONMENT, LLC. UNAPPROVED USE IS THE SOLE RESPONSIBILITY OF THE UNAUTHORIZED USER.

TESS CORNERS DRIVE RECONSTRUCTION

CITY OF MUSKEGO

WAUKESHA COUNTY CITY OF MUSKEGO, WISCONSIN

REVISIONS

NO.	BY	DATE	DESCRIPTION
△			
△			
△			
△			

RECORD DRAWING OF COMPLETED CONSTRUCTION BY

RECORD DRAWINGS OF COMPLETED CONSTRUCTION CONFORMING TO CONTRACTOR AND/OR OWNERS RECORDS.
BY _____ DATE _____

Date of Preparation:

	BY	DATE
SURVEYED	JSH	10/31/2011
DRAWN	MLH	05/24/2012
DESIGNED	MPS	05/24/2012
CHECKED	MKS	05/24/2012

TESS CORNERS

CONSTRUCTION DETAILS

NTS

PROJECT ID 11M126.00

C5.04

© 2012 Foth Infrastructure & Environment, LLC

May 22, 2012 - 12:01pm mlh2 X:\ML\IE\2011\11M126-00\CAD\Plans\C5.04 - Details.dwg

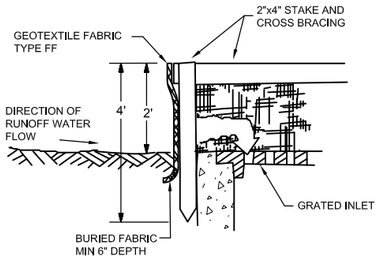

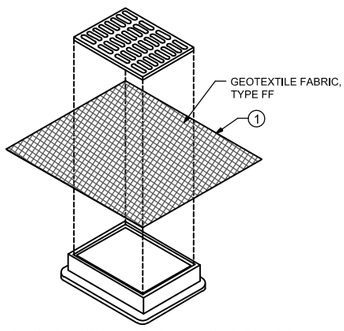

INLET PROTECTION, TYPE B (WITHOUT CURB BOX)
(CAN BE INSTALLED ON ANY INLET WITHOUT CURB BOX)

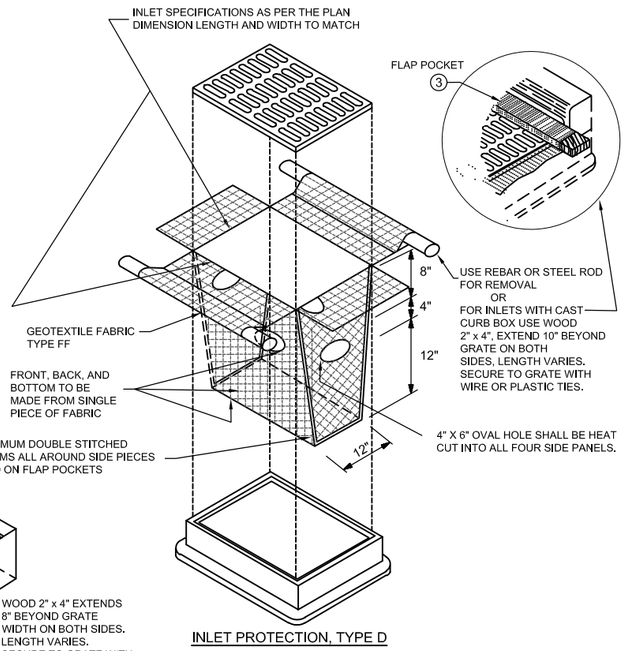

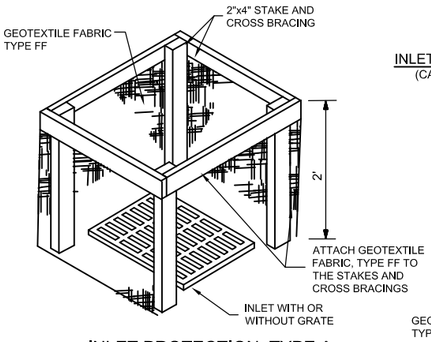

INLET PROTECTION, TYPE A

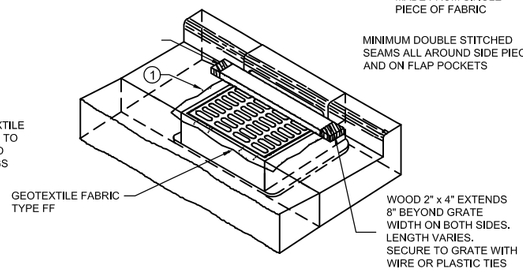

INLET PROTECTION, TYPE C (WITH CURB BOX)

INLET PROTECTION, TYPE D
(CAN BE INSTALLED ON ANY INLET TYPE WITH OR WITHOUT A CURB BOX AS PER NOTE 2)

GENERAL NOTES

MANUFACTURED ALTERNATIVES APPROVED AND LISTED ON THE DEPARTMENT'S EROSION CONTROL PRODUCT ACCEPTABILITY LIST MAY BE SUBSTITUTED.

WHEN REMOVING OR MAINTAINING INLET PROTECTION, CARE SHALL BE TAKEN SO THAT THE SEDIMENT TRAPPED ON THE GEOTEXTILE FABRIC DOES NOT FALL INTO THE INLET. ANY MATERIAL FALLING INTO THE INLET SHALL BE REMOVED IMMEDIATELY.

1. FINISHED SIZE, INCLUDING FLAP POCKETS WHERE REQUIRED, SHALL EXTEND A MINIMUM OF 10" AROUND THE PERIMETER TO FACILITATE MAINTENANCE OR REMOVAL.
2. FOR INLET PROTECTION TYPE C WITH CURB BOX, AN ADDITIONAL 18" FABRIC IS WRAPPED AROUND THE WOOD AND SECURED WITH STAPLES. THE WOOD SHALL NOT BLOCK THE ENTIRE HEIGHT OF THE CURB BOX OPENING.
3. FLAP POCKETS SHALL BE LARGE ENOUGH TO ACCEPT WOOD 2X4.

INSTALLATION NOTES

TYPES A, B & C

TRIM EXCESS FABRIC IN THE FLOW LINE TO WITHIN 3" OF THE GRATE.
THE CONTRACTOR SHALL DEMONSTRATE A METHOD OF MAINTENANCE, USING A SEWN FLAP, HAND HOLDS OR OTHER METHOD TO PREVENT ACCUMULATED SEDIMENT FROM ENTERING INLET.

TYPE D

DO NOT INSTALL INLET PROTECTION TYPE D IN INLETS SHALLOWER THAN 30", MEASURED FROM THE BOTTOM OF THE INLET TO THE TOP OF THE GRATE.

TRIM EXCESS FABRIC IN THE FLOW LINE TO WITHIN 3" OF GRATE.

THE INSTALLED BAG SHALL HAVE A MINIMUM SIDE CLEARANCE, BETWEEN THE INLET WALLS AND THE BAG, MEASURED AT THE BOTTOM OF THE OVERFLOW HOLES, OF 3", WHERE NECESSARY THE CONTRACTOR SHALL CINCH THE BAG, USING PLASTIC ZIP TIES, TO ACHIEVE 3" CLEARANCE. THE TIES SHALL BE PLACED AT A MAXIMUM OF 4" FROM THE BOTTOM OF THE BAG.

This drawing based on Wisconsin Department of Transportation Standard Detail Drawing 8 E 10-2.

C5.05 | 1

INLET PROTECTION TYPE A, B, C, AND D

GENERAL NOTES

1. TRENCH SHALL BE A MINIMUM OF 4" WIDE & 6" DEEP TO BURY AND ANCHOR THE GEOTEXTILE FABRIC. FOLD MATERIAL TO FIT TRENCH AND BACKFILL & COMPACT TRENCH WITH EXCAVATED SOIL.
2. WOOD POSTS SHALL BE A MINIMUM SIZE OF 1 ⅛" X 1 ⅛" OF OAK OR HICKORY.
3. CONSTRUCT SILT FENCE FROM A CONTINUOUS ROLL IF POSSIBLE BY CUTTING LENGTHS TO AVOID JOINTS. IF A JOINT IS NECESSARY USE ONE OF THE FOLLOWING TWO METHODS; A) OVERLAP THE END POSTS AND TWIST, OR ROTATE, AT LEAST 180 DEGREES, B) HOOK THE END OF EACH SILT FENCE LENGTH.

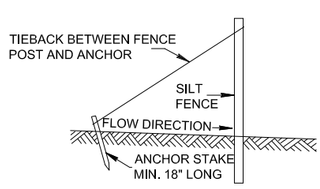

SILT FENCE TIE BACK
(WHEN ADDITIONAL SUPPORT REQUIRED)

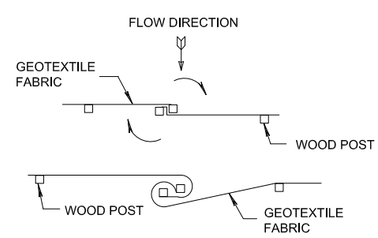

TWIST METHOD

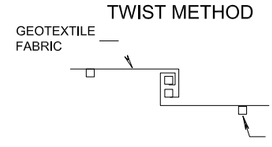

TWIST METHOD

NOTE: ADDITIONAL POST DEPTH OR TIE BACKS MAY BE REQUIRED IN UNSTABLE SOILS

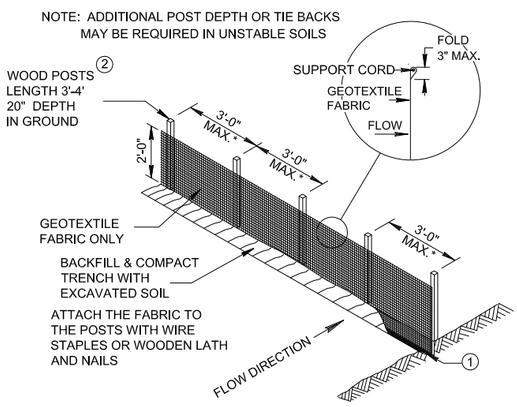

* NOTE: 8'-0" POST SPACING ALLOWED IF A WOVEN GEOTEXTILE FABRIC IS USED.

SILT FENCE

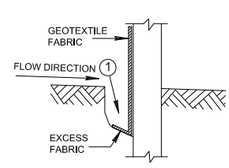

TRENCH DETAIL

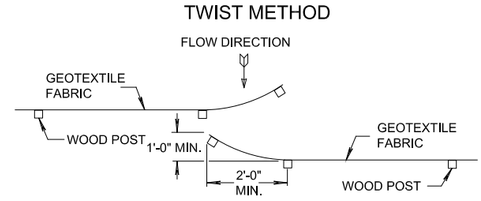

HOOK METHOD

JOINING TWO LENGTHS OF SILT FENCE 4

This drawing based on Wisconsin Department of Transportation Standard Detail Drawing 8 E 9-6.

C5.05 | 2

SILT FENCE

© 2012 Foth Infrastructure & Environment, LLC

PROJECT ID 11M126.00

C5.05
SHEET 77 OF 79

NTS

TESS CORNERS
EROSION CONTROL DETAILS

		BY	DATE
Date of Preparation:			
SURVEYED	JSH		10/31/2011
DRAWN	MLH		05/24/2012
DESIGNED	MPS		05/24/2012
CHECKED	MKS		05/24/2012

REVISIONS

NO.	BY	DATE	DESCRIPTION
△			
△			
△			
△			

RECORD DRAWING OF COMPLETED CONSTRUCTION BY

RECORD DRAWINGS OF COMPLETED CONSTRUCTION CONFORMING TO CONTRACTOR AND/OR OWNERS RECORDS.
BY _____ DATE _____

TESS CORNERS DRIVE RECONSTRUCTION

CITY OF MUSKEGO

WAUKESHA COUNTY

CITY OF MUSKEGO, WISCONSIN

Foth
Foth Infrastructure & Environment, LLC
2514 S. 102nd Street
Suite 278, Lincoln Center II
West Allis, WI 53227
Phone: 414-336-7900 Fax: 414-336-7901

REUSE OF DOCUMENTS
THIS DOCUMENT HAS BEEN DEVELOPED FOR A SPECIFIC APPLICATION AND NOT FOR GENERAL USE. THEREFORE IT MAY NOT BE USED WITHOUT THE WRITTEN APPROVAL OF FOTH INFRASTRUCTURE AND ENVIRONMENT, LLC. UNAPPROVED USE IS THE SOLE RESPONSIBILITY OF THE UNAUTHORIZED USER.

COHESIVE SOILS
SCOURSTOP TRANSITION MAT
INSTALLATION DETAILS

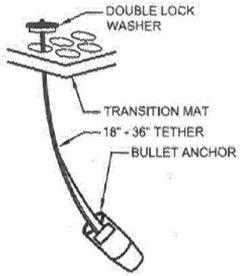

PIPE DIAMETER	DISCHARGE (CFS)	SCOURSTOP WIDTHxLENGTH
12"	8	4' x 4'
24"	30	4' x 8'
36"	75	8' x 12'
48"	100	12' x 16'
60"	150	12' x 20'
72"+		SEE DETAILS

SHORELINE PROTECTION:

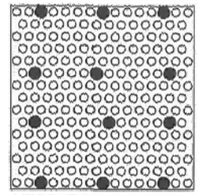

ANCHOR CONFIGURATION FOR SLOPES STEEPER THAN 5:1; TRANSITION MATS OVER A MIN. 8 OZ. GEOTEXTILE

ADD EXTRA ANCHORS IF NECESSARY TO ENSURE CONSISTENT CONTACT WITH SOIL, OR IMPROVE SOIL SURFACE SMOOTHNESS.

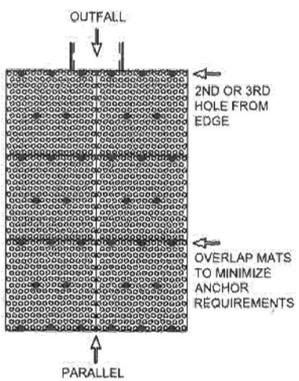

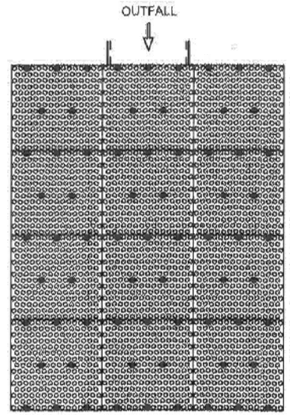

POSITION ANCHORS TO SECURE SCOURSTOP MATS FLUSH WITH SOIL SURFACE. MINIMIZE GAPS OR BRIDGING.

ANCHOR REQUIREMENTS*:
FIRST ROW OF SCOURSTOP MATS
- MINIMUM OF 8 ANCHORS
SECOND ROW OF SCOURSTOP MATS
- MINIMUM OF 5 ANCHORS

*TO ACHIEVE CONSISTENT CONTACT WITH THE SOIL, EXCEED THE MINIMUM ANCHOR REQUIREMENT AT INSTALLATION.

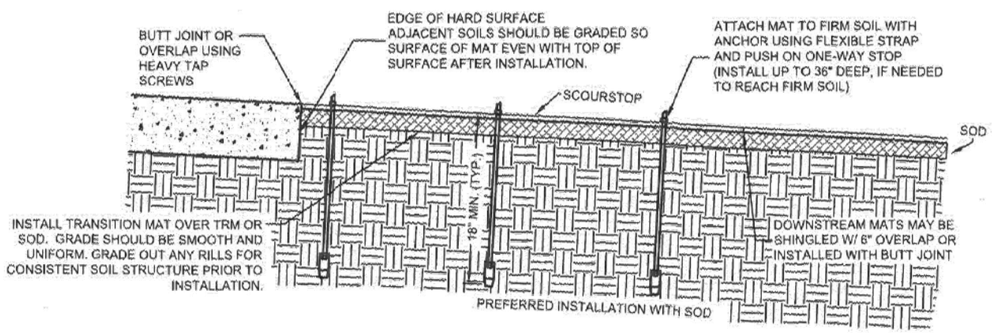

REVISED 1/10/2010

SCOUR STOP DETAIL

C5.06 | 3

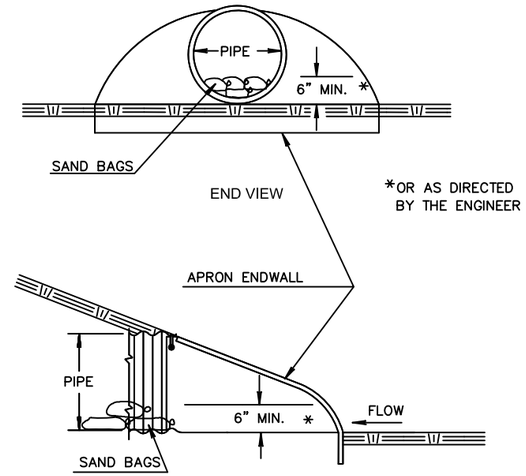

SIDE VIEW

CULVERT PIPE DITCH CHECK

C5.06 | 1

GENERAL NOTES:
18" X 30" ROCK FILLED FILTER BAG SHALL BE COMPRISED OF THE FOLLOWING:
–HDPE HIGH DENSITY POLYETHYLENE
–HDPE HIGH DENSITY POLYETHYLENE DRAW STRING KNITTED DIRECTLY INTO BAG OPENING.
–80% FABRIC CLOSURE WITH APPARENT OPENING SIZE NO LARGER THAN *" X *"
–ROLLED SEAM USING A MINIMUM OF 480 DENIER POLYESTER SEWING YARN FOR STRENGTH AND DURABILITY.
USE WELL GRADED COARSE AGGREGATE CONFORMING TO THE FOLLOWING GRADATION REQUIREMENTS

SIEVE SIZE	SIZE NO. AASHTO No. 67
2 INCH (50 mm)	
1.5 INCH (37.5mm)	
1 INCH (25.0 mm)	100
0.75 INCH (19.0mm)	90–100
0.5 INCH (9.5mm)	20–55
No. 4 (4.75mm)	0–10
No. 8 (2.36mm)	0–5

(1) SIZE No. ACCORDING TO AASHTO M 43

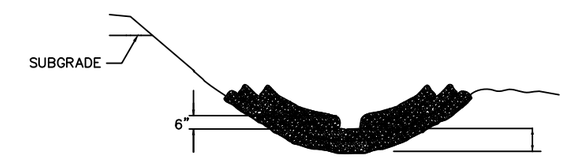

CROSS SECTIONAL VIEW

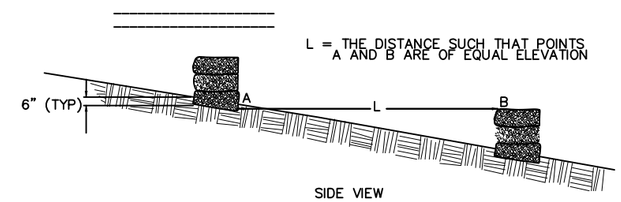

SIDE VIEW

DITCH CHECK DETAIL

COURSE AGGREGATE INFORMATION

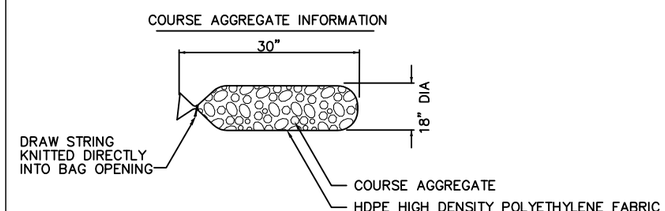

FILTER BAG DETAIL
(PRIOR TO INSTALLATION)

ROCK FILLED FILTER BAGS

C5.06 | 2

Foth
Foth Infrastructure & Environment, LLC
2544 S. 108th Street
Suite 278, Lincoln Center II
West Allis, WI 53227
Phone: 414-336-7900 Fax: 414-336-7901

REUSE OF DOCUMENTS
THIS DOCUMENT HAS BEEN DEVELOPED FOR A SPECIFIC APPLICATION AND NOT FOR GENERAL USE. THEREFORE IT MAY NOT BE USED WITHOUT THE WRITTEN APPROVAL OF FOTH INFRASTRUCTURE AND ENVIRONMENT, LLC. UNAPPROVED USE IS THE SOLE RESPONSIBILITY OF THE UNAUTHORIZED USER.

TESS CORNERS DRIVE RECONSTRUCTION

CITY OF MUSKEGO

WAUKESHA COUNTY

CITY OF MUSKEGO, WISCONSIN

NO.	BY	DATE	REVISIONS DESCRIPTION
△			
△			
△			
△			

RECORD DRAWING OF COMPLETED CONSTRUCTION BY

RECORD DRAWINGS OF COMPLETED CONSTRUCTION CONFORMING TO CONTRACTOR AND/OR OWNERS RECORDS.
BY _____
DATE _____

Date of Preparation:

	BY	DATE
SURVEYED	JSH	10/31/2011
DRAWN	MLH	05/24/2012
DESIGNED	MPS	05/24/2012
CHECKED	MKS	05/24/2012

TESS CORNERS

EROSION CONTROL DETAILS

NTS

PROJECT ID 11M126.00

C5.06

© 2012 Foth Infrastructure & Environment, LLC

May 22, 2012 - 2:45pm mlh2 X:\ML\IE\2011\11M126-00\CAD\Plans\C5.06 - Details.dwg

UNCLASSIFIED EXCAVATION VOLUME TABLE

Station	Total Cut Volume	Total Fill Volume	Total Cum Cut Vol	Total Cum Fill Vol	Total Net Volume
10+50.00	0.00	0.00	0.00	0.00	0.00
11+00.00	91.95	0.05	91.95	0.05	91.89
11+50.00	184.65	0.46	276.61	0.51	276.10
12+00.00	170.66	1.25	447.27	1.76	445.51
12+50.00	159.91	2.25	607.18	4.01	603.17
13+00.00	167.32	4.36	774.50	8.37	766.13
13+50.00	164.32	11.48	938.83	19.85	918.98
14+00.00	160.83	10.74	1099.65	30.58	1069.07
14+50.00	182.51	2.21	1282.16	32.80	1249.37
15+00.00	196.17	0.14	1478.33	32.94	1445.38
15+27.86	88.32	1.59	1566.64	34.54	1532.11
15+50.00	48.40	7.20	1615.05	41.74	1573.31
16+00.00	94.26	35.31	1709.30	77.05	1632.24
16+50.00	115.88	25.90	1825.18	102.96	1722.21
16+93.60	148.23	3.62	1973.41	106.59	1866.83
17+00.00	26.55	0.00	1999.95	106.59	1893.37
17+50.00	228.18	0.01	2228.14	106.60	2121.54
18+00.00	280.95	0.01	2509.09	106.61	2402.48
18+06.17	39.14	0.00	2548.23	106.61	2441.62
18+50.00	273.72	0.00	2821.94	106.61	2715.34
18+92.76	246.49	0.00	3068.44	106.61	2961.83
19+00.00	38.80	0.00	3107.24	106.61	3000.63
19+50.00	211.01	0.04	3318.23	106.65	3211.60
20+00.00	143.34	1.47	3461.58	108.12	3353.46
20+34.15	91.61	1.92	3553.18	110.04	3443.14
20+50.00	47.15	0.66	3600.34	110.72	3489.63
21+00.00	155.07	1.90	3755.40	112.62	3642.79
21+13.82	41.77	0.64	3797.19	113.26	3683.93
22+50.00	124.80	1.46	3921.98	114.72	3807.26
22+00.00	196.27	1.20	4118.25	115.92	4002.33
22+13.81	58.59	0.09	4176.84	116.01	4060.83
22+50.00	148.08	0.35	4324.92	116.35	4208.56
22+93.04	165.97	0.42	4490.88	116.78	4374.11
23+00.00	26.55	0.00	4517.43	116.78	4400.65
23+50.00	159.71	1.63	4677.14	118.41	4558.73
23+83.42	102.85	1.07	4779.99	119.48	4660.52
24+00.00	50.23	1.24	4830.22	120.72	4709.51
24+50.00	142.83	7.36	4973.05	128.07	4844.98
24+59.82	29.82	0.92	5002.87	129.01	4873.87
25+00.00	116.21	2.09	5119.08	131.10	4987.98
25+20.34	56.99	1.59	5176.06	132.69	5043.37
25+50.00	77.98	16.57	5254.05	149.26	5104.79
26+00.00	126.90	39.00	5380.95	188.26	5192.69
26+50.00	132.92	17.62	5513.88	205.88	5307.99
26+63.46	38.79	1.47	5552.67	207.35	5345.31
27+00.00	97.47	4.20	5650.13	211.55	5438.58
27+33.52	112.71	5.68	5762.84	217.23	5545.61
27+50.00	69.18	1.52	5832.02	218.75	5613.27
28+00.00	137.73	18.78	5969.76	237.54	5732.21
28+50.00	81.99	35.29	6051.76	272.93	5778.92
29+00.00	90.71	20.24	6142.46	293.08	5849.38

UNCLASSIFIED EXCAVATION VOLUME TABLE

Station	Total Cut Volume	Total Fill Volume	Total Cum Cut Vol	Total Cum Fill Vol	Total Net Volume
29+50.00	121.99	4.90	6264.45	297.98	5966.47
30+00.00	153.26	3.90	6417.71	301.88	6115.84
30+50.00	160.71	3.27	6578.43	305.15	6273.27
31+00.00	155.17	2.79	6733.60	307.94	6425.66
31+50.00	136.69	4.57	6870.28	312.51	6557.77
31+89.80	93.33	3.90	6963.61	316.41	6647.20
32+00.00	22.36	1.24	6985.98	317.64	6668.34
32+50.00	104.64	11.07	7090.62	328.70	6761.92
33+00.00	101.25	13.53	7191.88	342.24	9849.64
33+50.00	214.03	8.13	7405.91	350.37	7055.54
33+57.60	55.27	0.25	7461.18	350.62	7110.55
34+00.00	233.40	1.32	7694.58	351.94	7342.64
34+50.00	147.15	3.48	7841.73	355.42	7486.30
35+00.00	145.37	4.21	7987.09	359.63	7627.46
35+50.00	145.82	3.64	8132.92	363.27	7769.65
36+00.00	147.24	1.76	8280.17	365.03	7915.13
36+24.33	76.95	0.18	8357.12	365.20	7991.91
36+50.00	85.18	0.24	8442.30	365.45	8076.86
37+00.00	165.06	0.97	8607.36	366.42	8240.95
37+50.00	167.83	0.91	8775.20	367.32	8407.87
37+88.36	142.29	0.32	8917.48	367.64	8549.84
38+00.00	46.97	0.00	8964.44	367.64	8596.80
38+50.00	213.21	1.04	9177.65	368.69	8808.97
39+00.00	243.60	1.04	9421.26	369.73	9051.53
39+12.50	68.22	0.01	9489.48	369.74	9119.74
39+50.00	231.59	0.04	9721.07	369.78	9351.29
39+80.34	209.07	3.87	9930.15	373.65	9556.50
40+00.00	134.26	5.32	10064.40	378.97	9685.43
40+50.00	257.81	23.76	10322.21	402.73	9919.48
40+60.47	38.21	7.22	10360.42	409.95	9950.47
41+00.00	140.72	25.13	10501.14	435.08	10066.07
41+01.97	6.98	1.09	10508.12	436.17	10071.95
41+18.00	56.59	5.30	10564.71	441.47	10123.24
41+43.47	86.05	14.92	10650.76	456.38	10194.37
41+50.00	21.04	7.74	10671.80	464.12	10207.67
41+77.81	91.64	21.53	10763.44	485.66	10277.78
41+84.97	24.33	1.79	10787.77	487.45	10300.32
42+00.00	49.46	9.57	10837.23	497.02	10340.20
42+08.08	25.35	10.28	10862.57	507.30	10355.27
42+18.40	31.83	14.13	10894.41	521.42	10372.98
42+26.47	24.61	8.42	10919.02	529.85	10389.17
42+35.61	28.99	8.86	10948.01	538.71	10409.30
24+50.00	79.49	20.40	11027.51	559.11	10468.39
42+68.81	154.75	31.11	11182.25	590.23	10592.03
43+00.00	249.63	44.70	11431.88	634.93	10796.95
43+09.47	68.80	12.85	11500.69	647.78	10852.91
43+40.72	217.08	50.07	11717.78	697.85	11019.92
43+50.00	62.33	10.15	11780.10	708.00	11072.10
44+00.00	347.94	21.61	12128.04	729.61	11398.43
44+50.00	380.55	42.32	12508.59	771.93	11736.66
44+69.42	213.33	12.50	12721.92	784.43	11937.49

UNCLASSIFIED EXCAVATION VOLUME TABLE

Station	Total Cut Volume	Total Fill Volume	Total Cum Cut Vol	Total Cum Fill Vol	Total Net Volume
45+00.00	317.49	31.44	13039.41	815.87	12223.55
45+50.00	383.33	76.26	13422.74	892.13	12530.61
45+51.55	9.44	1.74	13432.18	893.87	12538.31
45+90.58	166.70	34.35	13598.88	928.22	12670.66
46+00.00	43.64	8.35	13642.52	936.57	12705.96
46+34.55	154.10	42.43	13796.62	979.00	12817.63
46+50.00	69.19	20.46	13865.81	999.46	12866.35
46+76.05	115.90	36.63	13981.71	1036.08	12945.63
47+00.00	114.01	36.44	14095.72	1072.52	13023.19
47+17.55	79.06	34.13	14174.77	1106.65	13068.12
47+50.00	214.20	37.58	14388.98	1144.23	13244.75
47+59.05	85.02	0.16	14474.00	1144.39	13329.61
48+00.00	266.14	36.15	14740.14	1180.54	13559.60
48+00.55	1.98	0.96	14742.12	1181.50	13560.62
48+50.00	259.26	53.61	15001.01	1235.11	13765.90
48+77.55	183.82	7.57	17884.83	1242.68	13942.16
49+00.00	148.89	2.62	15333.72	1245.30	14088.43
49+50.00	339.42	4.00	15673.15	1249.29	14423.85
50+00.00	346.83	1.61	16019.98	1250.90	14769.09
50+50.00	351.61	1.16	16371.60	1252.06	15119.54
50+57.48	49.90	0.98	16421.48	1253.04	15168.44
50+70.22	83.56	1.51	16505.05	1254.55	15250.50
51+00.00	201.08	0.55	16706.13	1255.10	15451.04
51+06.96	46.57	0.39	16752.71	1255.48	15497.22
51+43.78	256.23	1.39	17008.92	1256.87	15752.06
51+50.00	45.49	0.00	17054.43	1256.87	15797.56
52+00.00	360.54	1.06	17414.98	1257.92	16157.04
52+06.87	48.97	0.31	17463.94	1258.24	16205.70
52+26.78	144.82	0.48	17608.76	1258.72	16350.04
52+50.00	171.05	0.18	17779.80	1258.89	16520.91
52+81.76	196.90	0.49	17976.70	1259.39	16717.32
53+00.00	94.93	0.29	18071.64	1259.67	16811.98
53+50.00	251.16	1.18	18322.80	1260.85	17061.95
54+00.00	246.81	0.80	18569.61	1261.65	17307.97
54+43.61	214.80	3.37	18784.41	1265.03	17519.39
54+50.00	29.37	2.71	18813.80	1267.74	17546.06
55+00.00	232.40	39.17	19046.20	1306.91	17739.29
55+41.52	197.78	25.52	19243.99	1332.42	17911.56
55+50.00	40.44	2.92	19284.43	1335.34	17949.08
56+00.00	240.61	8.28	19525.04	1343.62	18181.42
56+50.00	234.87	0.05	19759.92	1343.67	18416.24
57+00.00	373.55	6.63	20133.46	1350.29	18783.17
57+50.00	350.38	13.48	20483.84	1363.77	19120.05
57+67.44	64.10	4.24	20547.94	1368.02	19179.92
58+00.00	111.15	3.91	20659.09	1371.92	19287.16
58+09.73	30.42	0.59	20689.51	1372.51	19316.99
58+50.00	132.35	3.00	20821.85	1375.52	19446.32
59+00.00	88.04	1.75	20909.88	1377.26	19532.63
59+50.00	6.67	0.06	20916.55	1377.31	19539.24
60+00.00	10.45	0.00	20927.01	1377.32	19549.69
60+50.00	8.77	0.01	20935.78	1377.33	19558.45

May 22, 2012 - 2:37pm mlh2 X:\ML\IE\2011\11M126-00\CAD\Plans\C5.07.dwg

Foth
Foth Infrastructure & Environment, LLC
2514 S. 102nd Street
Suite 278, Lincoln Center II
West Allis, WI 53227
Phone: 414-336-7900 Fax: 414-336-7901

REUSE OF DOCUMENTS
THIS DOCUMENT HAS BEEN DEVELOPED FOR A SPECIFIC APPLICATION AND NOT FOR GENERAL USE. THEREFORE IT MAY NOT BE USED WITHOUT THE WRITTEN APPROVAL OF FOTH INFRASTRUCTURE AND ENVIRONMENT, LLC. UNAPPROVED USE IS THE SOLE RESPONSIBILITY OF THE UNAUTHORIZED USER.

TESS CORNERS DRIVE RECONSTRUCTION

CITY OF MUSKEGO

WAUKESHA COUNTY CITY OF MUSKEGO, WISCONSIN

REVISIONS			
NO.	BY	DATE	DESCRIPTION
△			
△			
△			
△			

RECORD DRAWING OF COMPLETED CONSTRUCTION BY

RECORD DRAWINGS OF COMPLETED CONSTRUCTION CONFORMING TO CONTRACTOR AND/OR OWNERS RECORDS.
BY ______ DATE ______

Date of Preparation:

	BY	DATE
SURVEYED	JSH	10/31/2011
DRAWN	MLH	05/24/2012
DESIGNED	MPS	05/24/2012
CHECKED	MKS	05/24/2012

TESS CORNERS

ROADWAY EXCAVATION QUANTITIES

NTS

PROJECT ID 11M126.00

C5.07

© 2012 Foth Infrastructure & Environment, LLC